RAD

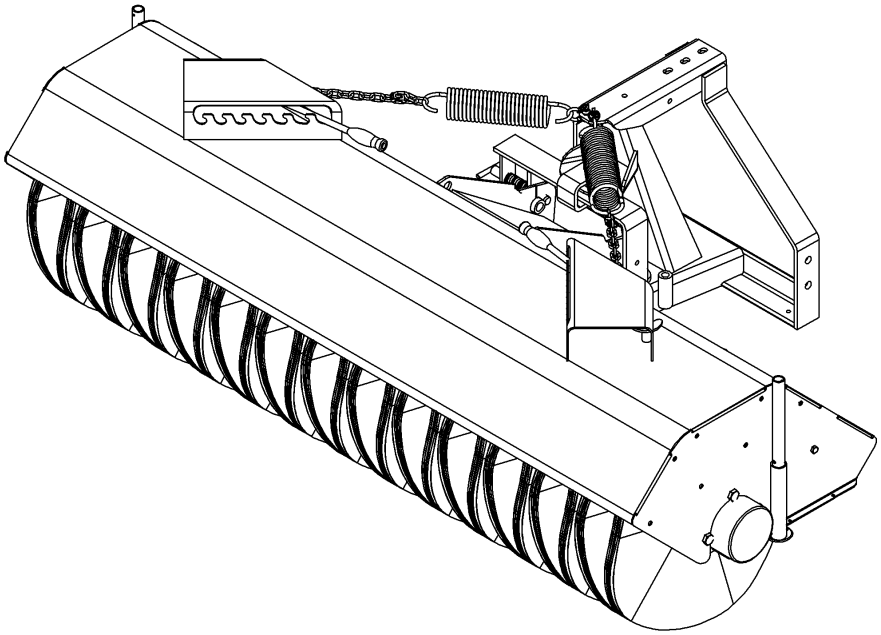

OPERATOR'S AND PARTS MANUAL

60" & 72" HYDRAULIC ROTARY BROOMS
MODELS HB60 & HB72

SERIAL NUMBER: 2510911 ET PLUS

INTERTEK
ISO 9001:2000

OM 0338BR-A
10/06

TABLE OF CONTENT

INTRODUCTION – TO THE PURCHASER 3
SAFETY PRECAUTIONS 4
Before Operation 4
Notice 5
Rotary Broom 5
Before Operation 5
Rotary Broom Operation 6
The Tractor 8
General Information 8
Operating the Tractor 8
During Operation 9
Roll-Over Protective Structure "ROPS" (If Equipped) 9
Additional Safety Equipment 9
Maintenance 10
Transporting 11
Storage 11
ASSEMBLY 12
Rotary Broom Assembly 12
Broom Pivot Assembly 12
Spring Installation 14
Parking Stand 14
Broom Installation on Tractor, Loader or "Skid Steer" 15
A- BROOM INSTALLATION ON TRACTOR 16
3 point hitch Cat.1 & 2 Installation 16
B- BROOM INSTALLATION ON LOADER 17
Broom Installation on the Loader hitch kit #8161 17
C- BROOM INSTALLATION ON "SKID STEER" 19
Broom Installation on the Universal hitch kit #8153 19
Hoses Installation on Tractor, Loader or "Skid Steer" 21
Removing the Broom from the Tractor 23

TABLE OF CONTENT

OPERATION....24

General Preparation....24

Operation....24

Rotary Broom Controls....24

Manual Angling Adjustment....24

Pivot Lock "T" Pin....24

Ground Pressure Adjustment....25

General Sweeping....26

Lawn Dethatching & Leaf Raking....26

Snow Removal....26

Troubleshooting....27

Debris Accumulation in Front....27

Uneven Wear of the Brush....27

Maintenance....27

Hardware....27

Brush Replacement....28

Lubrication....30

Storage....31

PARTS....32

Introduction....32

Decals....33

Rotary Broom Assembly....34

Rotary Broom Housing....36

Brush Assembly....37

Hydraulic Motor....38

3 Point Hitch cat. 1 & 2....39

AVAILABLE OPTIONS....40

WARRANTY....41

TORQUE SPECIFICATION TABLE....42

INTRODUCTION

TO THE PURCHASER

All products are designed to give safe, dependable service if they are operated and maintained according to instructions. **Read and understand this manual before operation.**

This manual has been prepared to assist the owner and operators in the safe operation and suitable maintenance of the rotary broom. The information is applicable to products at the time of manufacture and does not include modifications made afterwards.

Read and understand this operator's manual before attempting to put equipment into service. Familiarize yourself with the operating instructions and all the safety recommendations contained in this manual and those labeled on the equipment and on the tractor. Follow the safety recommendations and make sure that those with whom you work follow them.

Illustrations

The illustrations may not necessarily reproduce the full detail and the exact shape of the parts or depict the actual models, but are intended for reference only.

Direction Reference

All references to right and left, forward or rearward, are from the operator's seat, facing the steering wheel.

To assist your dealer in handling your needs, please record hereafter the model number and serial number of your rotary broom and tractor. It is also advisable to supply them to your insurance company. It will be helpful in the event that rotary broom or tractor is lost or stolen.

	TRACTOR	ROTARY BROOM
MODEL:		
SERIAL NUMBER:		
DATE OF PURCHASE:		
DEALER NAME:		

SAFETY PRECAUTIONS

SAFETY FIRST

This symbol, the industry's "Safety Alert Symbol", is used throughout this manual and on labels on the machine itself to warn of the possibility of personal injury. Read these instructions carefully. It is essential that you read the instructions and safety regulations before you attempt to assemble or use this rotary broom.

DANGER : Indicates an immediate hazardous situation which, if not avoided, will result in death or serious injury.

WARNING : Indicates a potentially hazardous situation which, if not avoided, could result in death or serious injury.

CAUTION : Indicates a potentially hazardous situation which, if not avoided, may result in minor or moderate injury.

IMPORTANT : Indicates that rotary broom or property damage could result if instructions are not followed.

NOTE : Gives helpful information.

All products are designed to give safe, dependable service if they are operated and maintained according to instructions. **Read and understand this manual before operation**. It is the owner's responsibility to be certain anyone operating this product reads this manual, and all other applicable manuals, to become familiar with this rotary broom and all safety precautions. Failure to do so could result in serious personal injury or rotary broom damage. If you have any questions, consult your dealer.

BEFORE OPERATION

Children

Tragic accidents can occur if the operator is not alert to the presence of children. Children are generally attracted to machines and the work being done. Never assume children will remain where you last saw them.

1. Keep children out of the operating area and under the watchful eye of another responsible adult.
2. Be alert and turn machine off if children enter the work area.
3. Before and when backing, look behind for small children.
4. Never carry children while operating the machine. They may fall off and be seriously injured or interfere with the safe operation of the machine.
5. Never allow children to play on the machine or rotary broom even when they are turned off.
6. Never allow children to operate the machine even under adult supervision.
7. Use extra care when approaching blind corners, shrubs, trees, or other obstructions that might hide children from sight.

NOTICE

A safe operator is the best assurance against accidents. All operators, no matter how experienced they may be, should read this operator's manual and all other related manuals before attempting to operate the rotary broom. Please read the following section and pay particular attention to all safety recommendations contained in this manual and those labeled on the rotary broom and on the tractor.

ROTARY BROOM

Before Operation

1. Read and understand this operator's manual and tractor operator's manual. Know how to operate all controls and how to stop the unit and disengage the controls quickly.
2. Never wear loose, torn, or bulky clothing around the tractor, the rotary broom. It may catch on moving parts or controls, causing injury.
3. Before and during seasons, thoroughly inspect the area where the rotary broom is to be used and remove all objects that may be thrown or cause damage to the rotary broom.
4. Set transmission to neutral and disengage clutch, if equipped, before starting the engine.
5. Do not operate rotary broom in wintertime without wearing adequate winter garments. Always wear protective clothing.
6. Never attempt to make any adjustments while engine is running. Read this manual carefully to acquaint yourself with the rotary broom as well as the tractor operator's manual. Working with unfamiliar rotary broom can lead to accidents. Be thoroughly familiar with the controls and proper use of the rotary broom.
7. Keep all safety guards in place and verify hardware for proper tightening.
8. Check for moving parts excessive wear regularly. Replace worn parts with genuine parts.
9. Replace all missing, illegible, or damaged safety and warning decals. See list of decals in operator's manual.
10. Do not modify or alter this rotary broom or any of its components, or any rotary broom function without first consulting your dealer.
11. Keep safety decals clean of dirt and grime.
12. Make sure the tractor is counterweighted as recommended by your dealer. Weights provide the necessary balance to improve stability, traction and steering.

Rotary Broom Operation

1. Before leaving the tractor unattended, take all possible precautions. Park the tractor/rotary broom on level ground, place the transmission in neutral, set the parking brake, disengage the PTO, lower the rotary broom to the ground, place all levers including auxiliary control levers in neutral, shut off the engine and remove the ignition key.
2. Before starting the tractor/ rotary broom, inspect and clean every rotating part.
3. Prior to operation, clear work area of all objects that can be picked up and thrown. Mark all curbs, pipes, etc. that cannot be moved.
4. Be sure the PTO switch/lever is in OFF position before starting engine.
5. Exercise extreme caution when operating on or crossing a gravel drive, walks, or roads. Stay alert for hidden hazards or traffic.
6. Do not carry passengers.
7. Keep clear of all rotating parts. Do not put hands or feet under, or into rotary broom with engine running. Be especially observant of the rotary broom areas of discharge, intake or all other mechanical motions.
8. Park the tractor/rotary broom on level ground, place the transmission in neutral, set the parking brake, disengage the PTO, lower the rotary broom to the ground, place all control levers in neutral, shut off the engine, remove the ignition key and allow the rotating parts to stop BEFORE making any repairs, adjustments or inspections.
9. If the rotary broom starts to vibrate abnormally, disengage the PTO, stop the engine immediately and check for cause. Excessive vibration is generally a sign of a problem.
10. Do not run the engine indoors except when starting engine and transporting attachment in or out of building. Carbon monoxide gas is colorless, odorless and deadly.
11. Do not attempt to operate on steep slopes. If operating on slopes is necessary, exercise extreme caution when changing direction.
12. Never operate rotary broom without guards, and other safety protective devices in place. All tractor and rotary broom shields and covers must be correctly installed at all times. When necessary to remove these, they must be reinstalled immediately.
13. Never operate rotary broom near glass enclosures, automobiles, window wells, embankments, etc., without proper adjustment of discharge angle.
14. Never operate rotary broom at high transport speeds on a slippery surface.
15. Use extra caution when backing up.
16. Disengage power to rotary broom when transporting or when not in use.
17. Never operate the rotary broom without good visibility and lighting.
18. Prolonged exposure to loud noise can cause impairment or loss of hearing. Wear a suitable hearing protective device such as earmuffs or earplugs to protect against objectionable or uncomfortable noises.
19. Never allow anyone near the work area.
20. Securely connect rotary broom drive shaft. Check that all tractor and rotary broom drivelines are in good working order. Rotary broom drive shaft coupler must securely lock to and be retained by annular groove on tractor drive shaft.

21. Never allow anyone to operate the rotary broom until they have read the manual completely and are thoroughly familiar with basic tractor and rotary broom operation.

22. Make sure the tractor is counterweighted as recommended by your dealer. Weights provide the necessary balance to improve stability, traction and steering.

23. Always make sure all rotary broom components are properly installed and securely fastened BEFORE operation.

24. Make sure nobody is in the working area of the rotary broom. The debris that can be thrown could cause serious personal injuries.

25. Adjust spring tension so that the rotary broom head weighs approximately 50 lbs when the front is lifted.

THE TRACTOR

General Information

1. Read the operator's manual carefully before using tractor. Lack of operating knowledge can lead to accidents.
2. Do not permit anyone but the operator to ride on the tractor. There is no safe place for passengers.

Operating the Tractor

1. Never run the tractor engine in a closed building without adequate ventilation, as the exhaust fumes are hazardous.
2. Adopt safe driving: If the tractor is equipped with independent Right/Left brake pedals, keep the brake pedals latched together at all times unless independent braking is required. Never use independent braking during transport.
3. Always drive at a safe speed relative to local conditions and ensure that your speed is low enough for an emergency stop to be safe and secure.
4. Reduce speed prior to turns to avoid the risk of overturning. Keep speed to a minimum.
5. Always keep the tractor in gear to provide engine braking when going downhill. Do not coast.
6. Never allow an open flame near the fuel tank or battery.
7. Make sure the PTO shield is installed when using the rotary broom and always replace the PTO shield if damaged.
8. Park the tractor/rotary broom on level ground, place the transmission in neutral, set the parking brake, disengage the PTO, lower the rotary broom to the ground, place all levers including auxiliary control levers in neutral, shut off the engine and remove the ignition key BEFORE leaving the tractor.
9. Never park the tractor on a steep slope.
10. Do not attempt to operate on steep slopes. Avoid sudden uphill turns on steep slopes.
11. Handle fuel with care, as it is highly flammable.
12. Use approved fuel container.
13. Never add fuel to a running engine or a hot engine.
14. Fill fuel tank outdoors with extreme care. Never fill fuel tank indoors. Replace fuel cap securely and wipe up spilled fuel.
15. Never attempt to start the engine and/or engage rotary broom drive while standing beside the tractor.
16. Always start the engine from the operator's seat with all the transmission lever(s) and rotary broom drive lever in neutral.
17. DO NOT bypass the safety system by shorting across the terminals of the starter motor to start the engine. This may cause the tractor to move suddenly.
18. If the safety start system does not work, consult your dealer immediately.

During Operation

1. Do not allow passengers on the tractor/rotary broom at any time. There is no safe place for passengers on this rotary broom. The operator MUST sit in the tractor seat.
2. Eye and hearing protection is recommended when operating the rotary broom.
3. Operate only during daylight hours, or when the area is well lit with bright artificial light.
4. Park the tractor/rotary broom on level ground, place the transmission in neutral, set the parking brake, disengage the PTO, lower the rotary broom to the ground, place all control levers in neutral, shut off the engine and remove the ignition key BEFORE leaving the operator's seat.
5. Inspect the rotary broom after striking any foreign object to assure that all rotary broom parts are secure and not damaged.
6. Be especially observant of the operating area and terrain. Watch for holes, rocks, or other hidden hazards. ALWAYS inspect the area prior to operating rotary broom.
7. DO NOT operate rotary broom near the edge of drop-offs or banks.
8. DO NOT operate rotary broom on steep slopes as overturn may result.
9. Operate up and down (not across) intermediate slopes. Avoid sudden starts and stops.
10. Drive tractor backwards up steeper slopes with rotary broom off. Then operate as you travel down the slope.
11. Slow down before you change directions on any slope.
12. Make sure the tractor is counterweighted as recommended by your dealer. Weights provide the necessary balance to improve stability, traction and steering.
13. Never stand alongside of the rotary broom while the engine is running.

Roll-Over Protective Structure "ROPS"
(If Equipped)

1. DO NOT weld, drill or alter the ROPS. Damaged ROPS must not be straightened or used. If damage does occur, consult your dealer.
2. If the ROPS is lowered or removed from the tractor for any reason, it must be erected and/or refitted immediately. Original bolts or equivalent replacements must be used and tightened to the correct torque.
3. The manufacturer does not recommend usage of tractor with ROPS removed.
4. If a fold-down ROPS is used, the ROPS can be folded down for storage, but it must be pinned in the upright position prior to operation.
5. Seat belt usage: With ROPS installed on the tractor it is imperative that the seat belt be installed, used and correctly adjusted, at all times. DO NOT use a seat belt if operating without ROPS.

Additional Safety Equipment

A fire extinguisher and first aid kit should be kept readily accessible.

MAINTENANCE

ALWAYS USE GENUINE PARTS WHEN REPLACEMENT PARTS ARE REQUIRED

1. Keep the tractor and rotary broom properly maintained.
2. Park the tractor/rotary broom on level ground, place the transmission in neutral, set the parking brake, disengage the PTO, lower the rotary broom to the ground, place all control levers in neutral, shut off the engine and remove the ignition key and allow the rotating parts to stop BEFORE making any rotary broom adjustments.
3. To avoid injury, do not adjust, unblock the driving system, or service the rotary broom with the tractor engine running. Make sure rotating components have completely stopped before leaving the operator's seat.
4. Keep the tractor/rotary broom clean. Snow , dirt or ice build-up can lead to malfunction or personal injury from thawing and refreezing in garage.
5. Always wear eye protection when cleaning or servicing the rotary broom.
6. DO NOT service the tractor while the engine is running or hot, or if the unit is in motion. Always lower rotary broom to the ground. If necessary to service rotary broom in raised position, securely support with stands or suitable blocking before working underneath. Do not rely on hydraulically supported devices for your safety. They can settle suddenly, leak down, or be accidentally lowered.
7. Do not attempt to service machine, clear obstructions or unclog the rotary broom's driving system with the engine running. Always shut off engine and allow all motion to cease.
8. The manufacturer will not accept responsibility for fitment of unapproved parts and/or accessories and any damages as a result of their use.
9. Make sure all shields and guards are securely in place following all service, cleaning, or repair work.
10. Do not modify or alter this rotary broom or any of its components or operating functions. If you have questions concerning modifications, consult with your dealer.
11. Do not operate a rotary broom that is defective or has missing parts. Make sure that all recommended maintenance procedures are completed before operating the rotary broom.
12. Check all controls regularly and adjust where necessary. Make sure that the brakes are evenly adjusted.
13. Periodically check all nuts and bolts for tightness, especially wheel hub and rim nuts.
14. To avoid serious personal injury: Escaping hydraulic/diesel fluid under pressure can penetrate the skin causing serious injury. Do not use your hands to check for leaks. Use a piece of cardboard or paper to search for leaks.
15. Stop engine and relieve pressure before connecting or disconnecting hydraulic hoses. Tighten all connections before starting engine or pressurizing hoses.

TRANSPORTING

1. Transporting on public roadway: When driving the tractor and rotary broom on the road or highway under 25 mph, at night or during the day, use flashing amber warning lights and the Slow Moving Vehicle ("SMV") identification emblem.
2. Check local traffic codes that may apply to unit usage on public roads and highways in your area. The use of flashing amber lights is acceptable in most localities. However, some localities may prohibit their use.
3. Always disengage rotary broom drive prior to transporting unit.

STORAGE

Before storing the rotary broom, certain precautions should be taken to protect it from deterioration.

1. Clean the rotary broom thoroughly.
2. Make all the necessary repairs.
3. Replace all safety signs that are damaged, lost, or otherwise become illegible. If a part to be replaced has a sign on it, obtain a new safety sign from your dealer and install it in the same place as on the removed part.
4. Repaint all parts from which paint has worn or peeled.
5. Lubricate the rotary broom as instructed under **"Lubrication"** section.
6. When the rotary broom are dry, oil all moving parts. Apply oil liberally to all surfaces to protect against rust.

NOTE: Do not allow any oil or grease on the broom bristles.

7. Store in a dry place.
8. If rotary broom has hydraulic components, install protective plugs and caps on the quick couplers.
9. Place the rotary broom on its parking stands, to avoid the bristles from touching the ground.
10. If the broom bristles are exposed to direct sunlight, cover the broom with a tarp.

ROTARY BROOM ASSEMBLY

The rotary broom is pre assembled at the factory, however, parts contained in the bag and box must be installed. Use the present manual and lay out all parts for assembly. Separate bolts and nuts into various sizes. After assembly, torque all the bolts according to the Torque Specification Table enclosed at the end of the manual.

Universal Hitch Assembly

(Figures 1-1a-2)

1. **Figure 1-1a:** Align the torsion spring (item 3) and the adjustment plate (item 2) between the two broom pivot tubes (item 1) placing hole **A** downward. The straight ends of the spring must rest on top of the broom pivot (item 1) and the adjustment plate (item 2) ass shown on Figure 1a.
2. **Figure 1-1a:** Insert the handle (item 4) through the broom pivot tubes (item 1), adjustment plate (item 2) and torsion spring (item 3) and position at approximately 45° from the ground making sure to align the hole in the handle with the hole in the adjustment plate. Secure with the 3/16'' x 1'' spring pin (item 5).
3. **Figure 1:** Install the plastic handle (item 6) on the handle (item 4).
4. **Figure 1:** Insert the 3/4'' x 3 1/4" bolt (item 15) through the universal hitch socket (item 9) and the broom pivot (item 1) making sure to raise the adjustment plate (item 2). Secure the broom pivot with a 3/4" lockwasher and 3/4'' NC stover nut (item 14-13) in the order illustrated.
5. **Figure 1:** Grease the outside of the spacer ring (item 8) and insert in the upper pivot bushing (item 7).
6. **Figure 1:** Place the bushing assembly in the universal hitch opening (item 9). Tip the broom pivot (item 1) forward till the holes line up with the bushing. Secure with a 1/2'' x 3 1/4'' hex. bolt (item 10), a 1/2'' lockwasher (item 11) and a 1/2" NC nylon insert locknut (item 12).

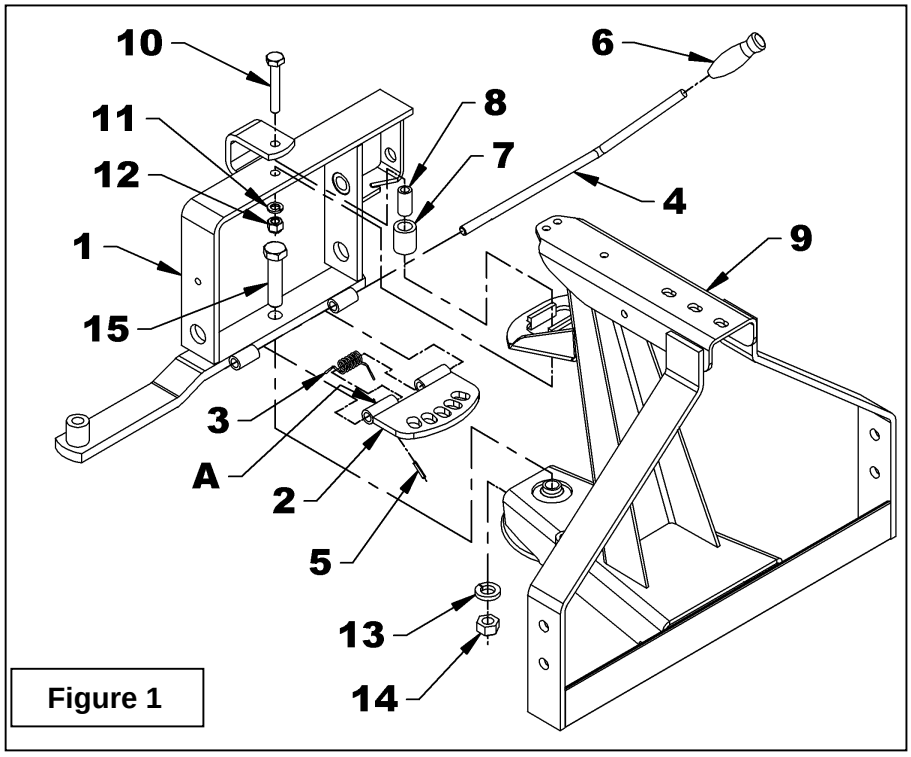

Figure 1

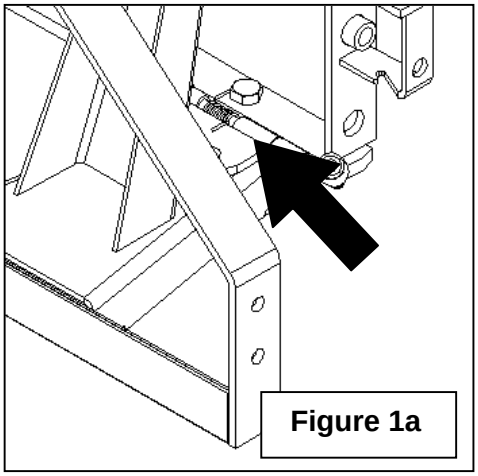
Figure 1a

7. **Figure 2:** Place the spring (item 1) in the broom pivot (item 4) and insert the "T" pin (item 3). Lock in place by inserting the ø1/4" x 2 1/2" spring pin (item 4) in the "T" pin and outside the spring. Pull on the "T" pin and turn it counter-clockwise so the spring pin goes into the notch and locks in place.

Parking Stand Installation
(Figure 3)

1. Lift the broom until you can insert a parking stand (item 1) into each holder from the underside.
2. Install a sheet metal screw (item 2) in the upper hole of each parking stand.
3. Set the parking stands in the position where they touch the ground and secure with a round wire lock pin (item 3).

Broom Pivot Installation
(Figure 4)

1. **Figure 4:** Attach the assembled broom pivot (item 1) to the broom housing (item 2) with two 5/8"NC x 2" hex. bolts (item 3), two pivot bushings which the exterior has been greased (item 4), two 11/16" hole flat washers, two 5/8" lockwashers and two 5/8'' NC nylon insert locknuts (items 5, 6, 7) in the order shown on the figure.
2. **Figure 4:** Turn the "T" pin (item 7) clockwise to unlock it and tilt the pivot to lock it on the broom housing.

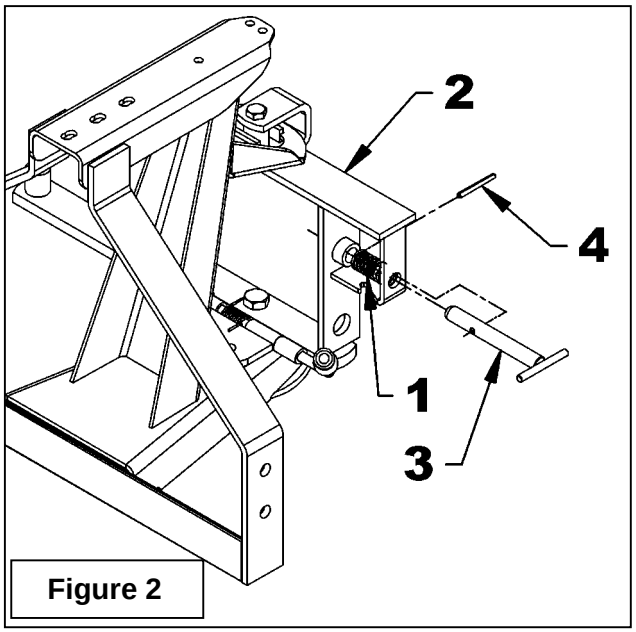

Figure 2

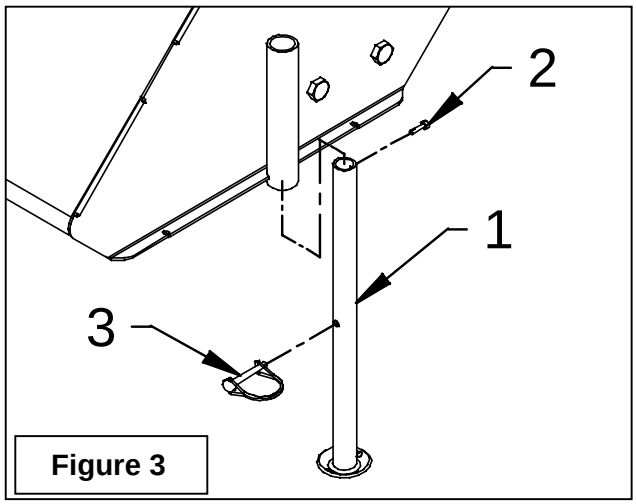

Figure 3

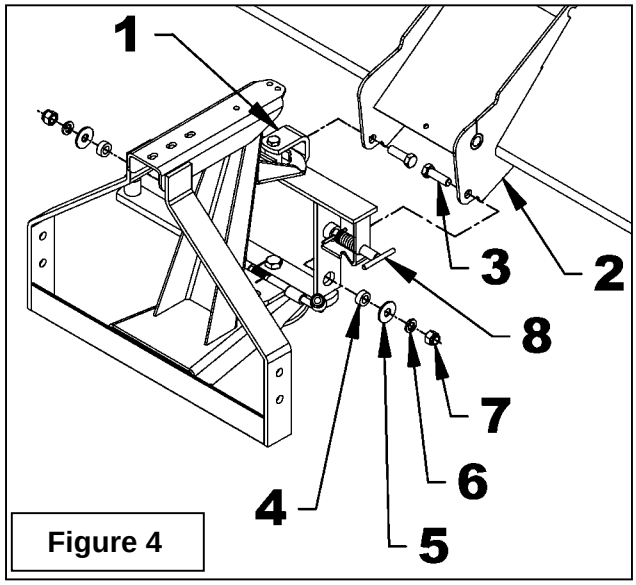

Figure 4

Spring Installation
(Figure 5)

1. Take apart two 1/4" clevis assemblies (item 1) and attach them to the universal hitch as shown on figure
2. Take apart the other two 1/4'' clevis assemblies (item 3) and insert one in the first link of each chain (item 4) then attach it to each engagement lever (item 5) making sure to place the head of the clevis bolt underneath
3. Attach the smaller spring (item 6) to the clevis on the right side of the universal hitch (item 2) and the bigger spring (item 7) to the clevis on the left side. Attach the other end of each spring (items 6-7) in the sixt link of each chain (item 4).

NOTE: The chain links allow for additional adjustments so, if the engagement levers (item 3) do not give an adequate adjustment, attach the tension spring in another link.

4. Install the bolt loop (item 10) on each clevis (item 3) as shown on Figure 4a.
5. Insert each engagement lever (item 5), handle first, in the notches of a tension adjustment box (item 8) as shown by the arrow.
6. Position a lever (item 5) in the first notch of the engagement box. Place yourself facing the broom and put one hand on the spring hook attached to the chain and the other hand on the lever putting the index and middle fingers between the clevis. Pull on the lever and the spring hook to grip the pivot pin located inside the adjustment box (item 8). Proceed the same way for the second lever.
7. Install a plastic handle (item 9) on each engagement lever.

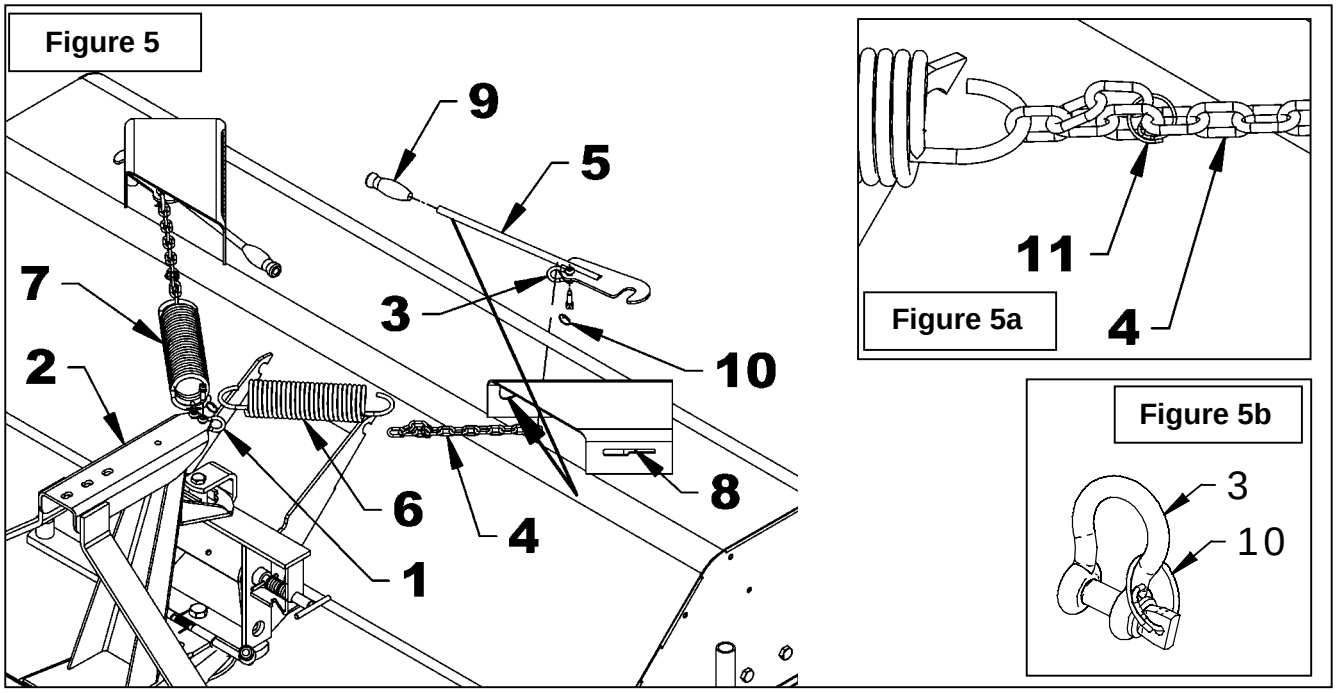

Broom Installation on A- Tractor , B- Loader or C-"SKID STEER"

WARNING: To avoid serious personal injuries: Before getting off the tractor: Park the tractor, loader or Skid Steer on level ground, place the transmission in neutral, set the parking brake, disengage the driving system, lower the nose of the male quick hitch as much as possible, place all levers including auxiliary control levers in neutral, shut off the engine and remove the ignition key.

IMPORTANT: Make sure the "T" pin (fig. B, item 1) is locked in the broom housing to prevent the universal hitch from bouncing and to facilitate hitching.

To lock the broom: Figure B : Pull the handle of the "T" pin (item 1), relieve the spring pin (item 2) from the broom pivot notch (item 3) and release the "T" pin handle. Then lift up or lower the broom (item 4), and when the two holes are aligned, the pin will automaticaly spring back and the broom wil be locked.

IMPORTANT: To prevent damage to the broom, make sure that the broom is well locked when in operation. To unlock the broom pull the "T" pin handle (fig.B, item 1) and secure the spring pin (fig.B, item 2) in the notch of the broom pivot. The broom may be in locked position ONLY when transporting, installing or removing the broom, and brush replacement.

ATTENTION: To avoid personal injuries or important damages, always make sure to keep a 90° angle between the hitch and the ground (see figure A below ⬇).

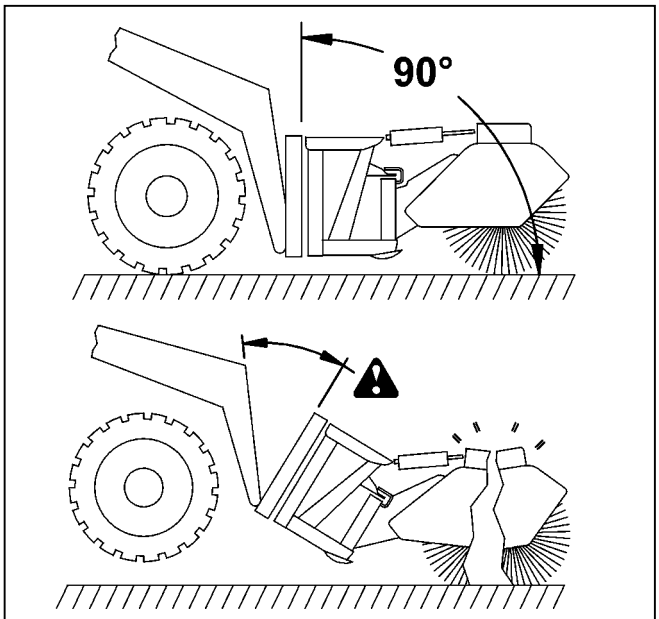

Figure A

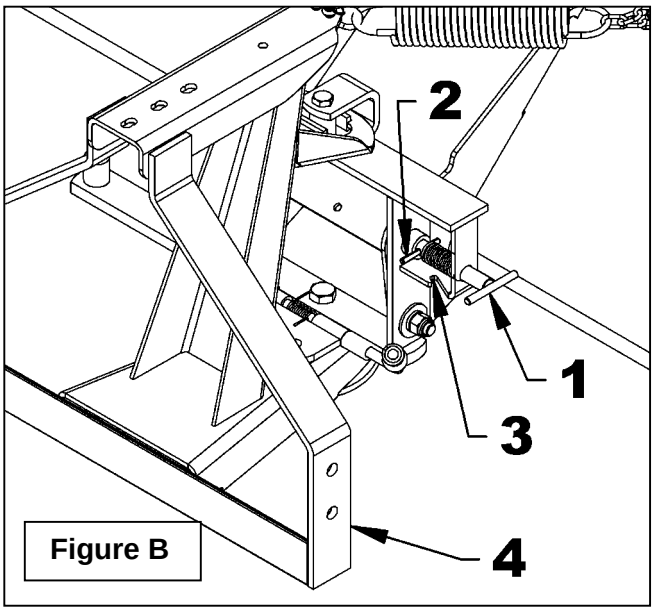

Figure B

A- BROOM INSTALLATION ON TRACTOR *(Figure 6A)*

NOTE: To install the broom on Tractor, you must acquire the 3 point hitch kit (cat.1 & 2) #8236

3 point hitch Cat.1 & 2 installation
(figure 6A - category 1 or category 2)

NOTE: When installing the #82366 hitch kit, make sure to choose the corresponding figures to your tractor's 3 point category (1 or 2).

1. As shown, attach the 3 point hitch upper support (item 1) to the universal hitch (item 2) with two 1/2"NC x 1 3/4" lg. hex. bolts (item 3), 9/16" hole flat washers (item 4), 1/2" lockwashers (item 5) and 1/2"NC nylon insert locknuts (item 6). The upper support (item 1) must be placed at the end of the slotted holes towards the front of the broom.

NOTE: The items 1, 7, 11, 12, 13 and 14 are provided with the 3 point hitch kit (cat.1 & 2) #8236.

2. As shown, attach the two 3 point hitch lower supports (item 7) to the universal hitch (item 2) with four 5/8"NC x 2" lg. hex. bolts (item 8), 5/8" lockwashers (item 9) and 5/8"NC nylon insert locknuts (item 10).
3. As shown, according to the category, attache the cat. 1 & 2 pins (item 11) on the 3 point hitch lower supports (item 7) with lockwashers (item 12) and hex. nuts (item 13). The 7/16" linchpins (item 14) wil be used to attach the broom on the tractor 3 point hitch.

GO TO: *Hose Installation* page 22

Figure 6A

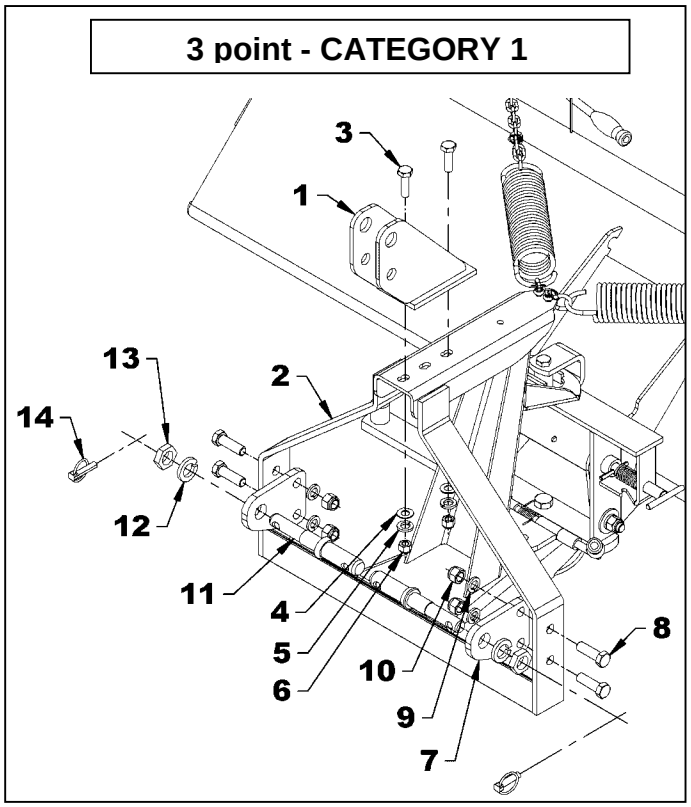

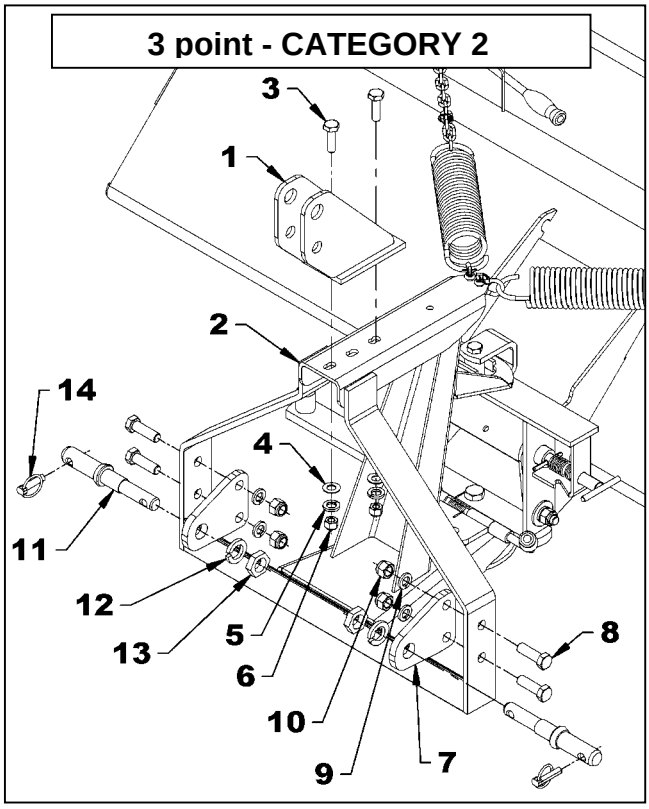

4. Attach the broom to the tractor 3 point hitch. Use the attaching points shown by the arrows on the figure beside according to the appropriated category.

5. Adjust the upper hith of the tractor 3 point hitch until the broom hitch is at 90º with the ground. See figure A, page 15

6. Adjust the anti-sway arms of the tractor 3 point hitch to eliminate the lateral movements of the vroom.

GO TO: *Hose Installation* page 22

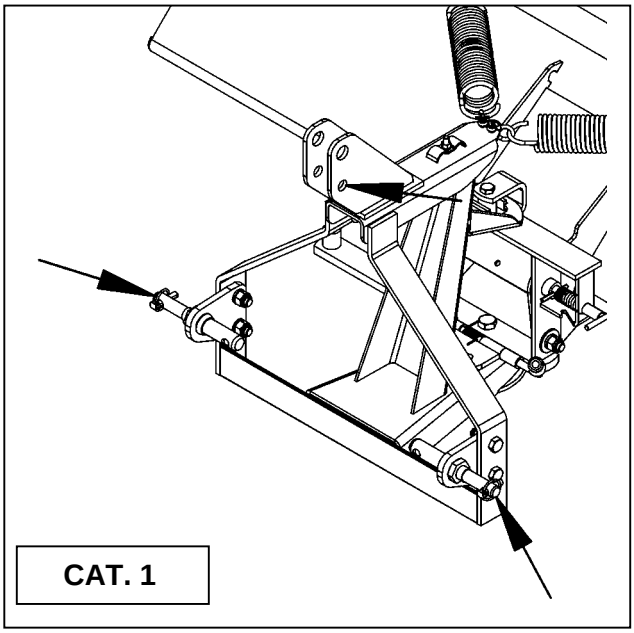

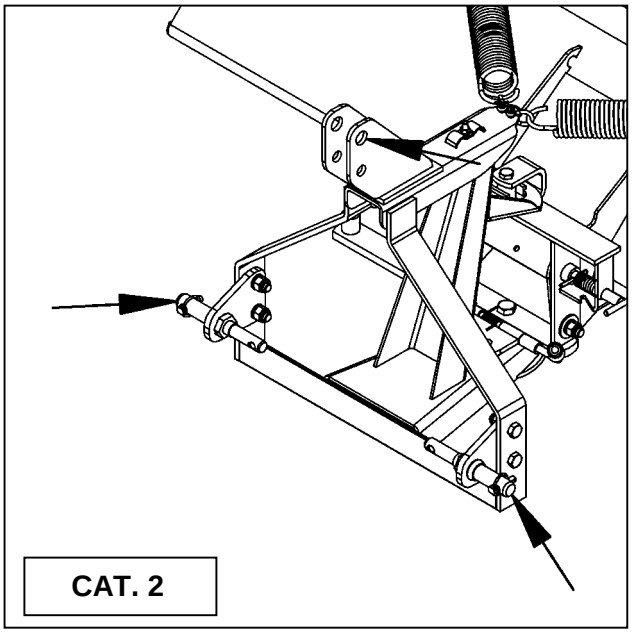

B- BROOM INSTALLATION ON LOADER (Figures 6B to 10B)

NOTE: To install the broom on Loader, you must acquire and install the Loader hitch kit #8161.

Broom Installation on the Loader hitch kit - #8161

Figure 6B: Place the equipment on a flat and clean surface. After the Loader hitch kit is installed on the loader, lower the hitch (item 1) and measure the distance (A) between the lowest point of the hitch (item 1) and the ground (item 2).

- **If the A distance is longer than 4 1/4", proceed with the Installation option 1 - figures 7B-8B.**
- **If the A distance is equal or smaller than 4 1/4", proceed with the Installation option 2 - figures 9B-10B.**

1. **Figure 7B or 9B:** As shown, attach the common upper support (item 1) to the universal hitch (item 2) with two 1/2"NC x 1 3/4" lg. hex. bolts (item 3), 9/16" hole flat washers (item 4), 1/2" lockwashers (item 5) and 1/2"NC nylon insert locknuts (item 6). The common upper support (item 1) must be placed at the end of the slotted holes towards the rear of the broom.
2. **Figure 7B or 9B:** As shown, attach the two common lower supports (item 7) to the universal hitch (item 2) with four 5/8"NC x 2" lg. hex. bolts (item 8), 5/8" lockwashers (item 9) 5/8"NC nylon insert locknuts (item 10).
3. **Figure 8B or 10B:** Attach the lower section of the broom back (item 2) to the hitch (item 1) with two 3/4"NC x 6" lg. hex. bolts (item 7), 3/4" lockwashers (item 8) and 3/4"NC hex. nuts (item 9).

   NOTE : The items 1, 7, 8 and 9 are provided with the Loader hitch kit #8161.
4. **Figure 8B or 10B:** Attach the upper section of the broom back (item 2) to the hitch (item 1) with the 5/8"NC x 5" lg. hex. bolt (item 3), 2" x 2" x 5/16" spacer (item 4), 5/8" lockwasher (item 5) and 5/8"NC hex. nut (item 6).

   NOTE : The items 1, 3, 4, 5 and 6 are provided with the Loader hitch kit #8161.

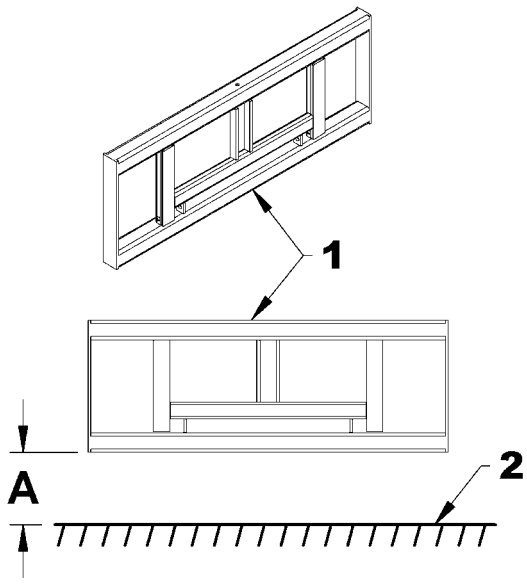

Figure 6B

GO TO: *Hose Installation* page 22

Loader - INSTALLATION OPTION 1 (**A** distance longer than 4 1/4")

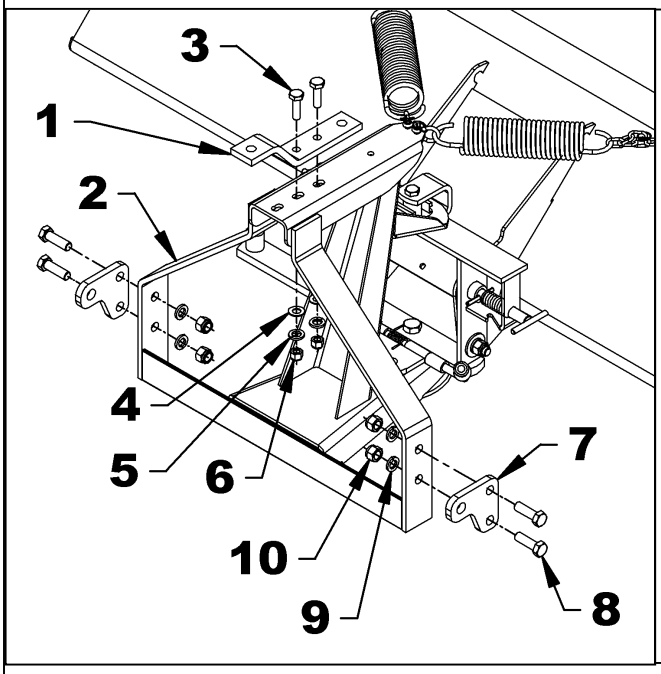

Figure 7B

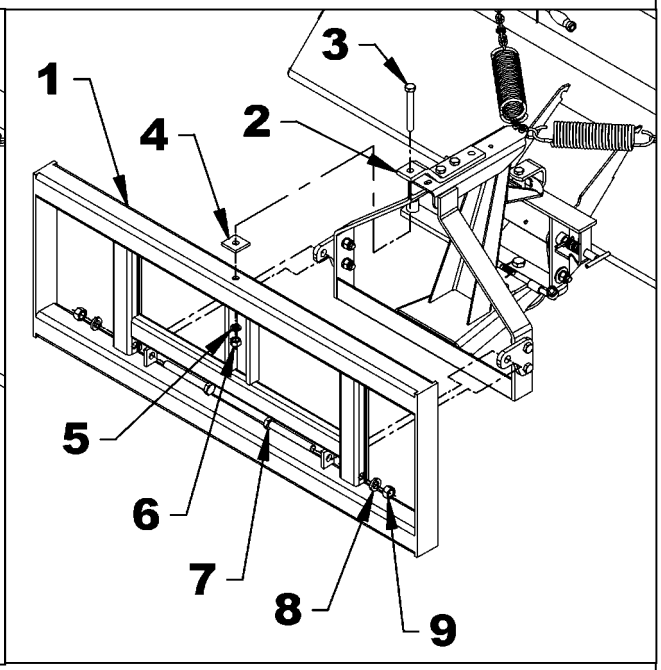

Figure 8B

Loader - INSTALLATION OPTION 2 (**A** distance equal or shorter than 4 1/4")

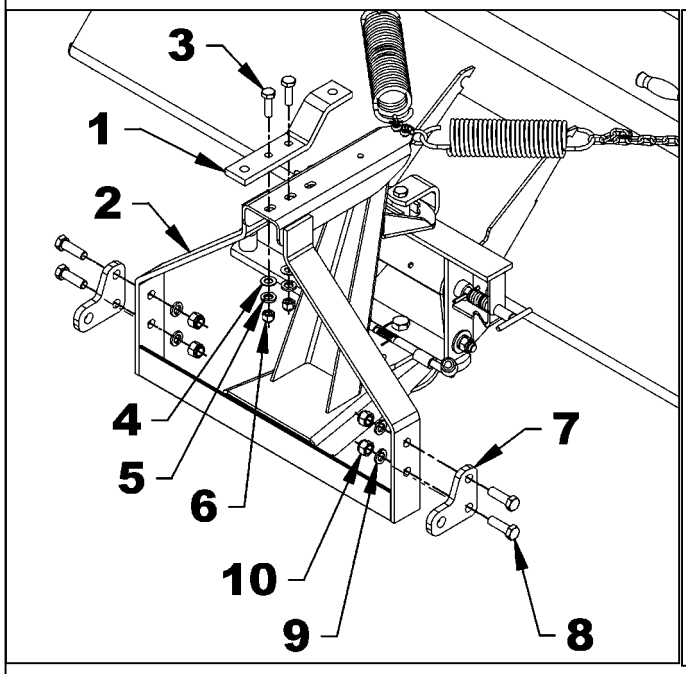

Figure 9B

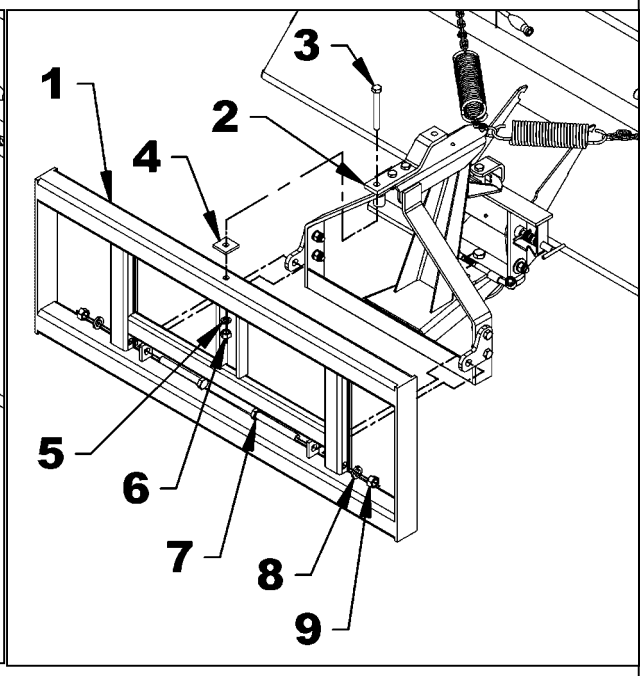

Figure 10B

C- BROOM INSTALLATION ON "SKID STEER" (Figures 6C to 10C)

NOTE: To install the broom on "SKID STEER", you must acquire and install the Universal hitch kit #8153.

Broom Installation on Universal hitch kit - #8153

Figure 6C: Place the equipment on a flat and clean surface. After the Universal hitch kit is installed on the "Skid Steer", lower down the hitch (item 1) and measure the distance (A) between the lowest point of the hitch (item 1) and the ground (item 2).

- **If the A distance is longer than 3", proceed with the Installation option 1 - figures 7C-8C.**
- **If the A distance is equal or smaller than 3", proceed with the Installation option 2 - figures 9C-10C**

1. **Figure 7C or 9C:** As shown, attach the common upper support (item 1) to the universal hitch (item 2) with two 1/2"NC x 1 3/4" lg. hex. bolts (item 3), 9/16" hole flat washers (item 4), 1/2" lockwashers (item 5) and 1/2"NC nylon insert locknuts (item 6). The common upper support (item 1) must be placed at the end of the slotted holes towards the front of the broom.
2. **Figure 7C or 9C:** As shown, attach the two common lower supports (item 7) to the universal hitch (item 2) with four 5/8"NC x 2" lg. hex. bolts (item 8), 5/8" lockwashers (item 9) 5/8"NC nylon insert locknuts (item 10).
3. **Figure 8C or 10C:** Attach the lower section of the broom back (item 2) to the hitch (item 1) with two 3/4"NC x 6" lg. hex. bolts (item 6), 3/4" lockwashers (item 7) and 3/4"NC hex. nuts (item 8).
4. **NOTE** The items 1, 6, 7, and 8 are provided with the Universal hitch kit #8153.
5. **Figure 8C or 10C:** Attach the upper section of the broom back (item 2) to the hitch (item 1) with the 5/8"NC x 1 1/2" lg. hex. bolt (item 3), 5/8" lockwasher (item 4) and 5/8"NC hex. nut (item 5).

   NOTE : The items 1, 3, 4 and 5 are provided with the Universal hitch kit #8153.

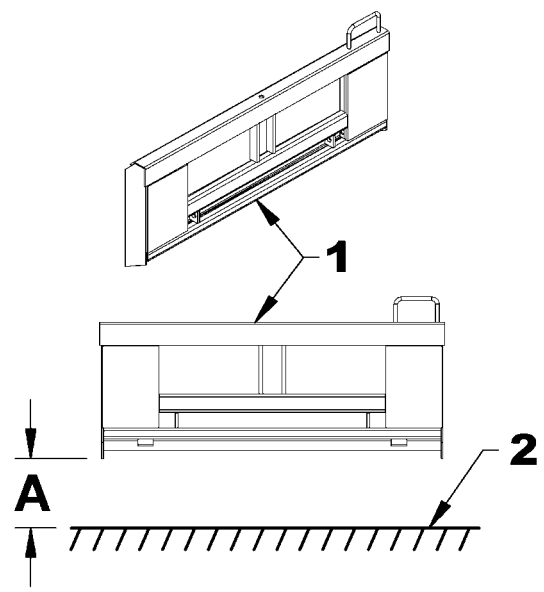

Figure 6C

GO TO: *Hose Installation* page 22

Skid Steer - INSTALLATION OPTION 1 (**A** distance longer than 3")

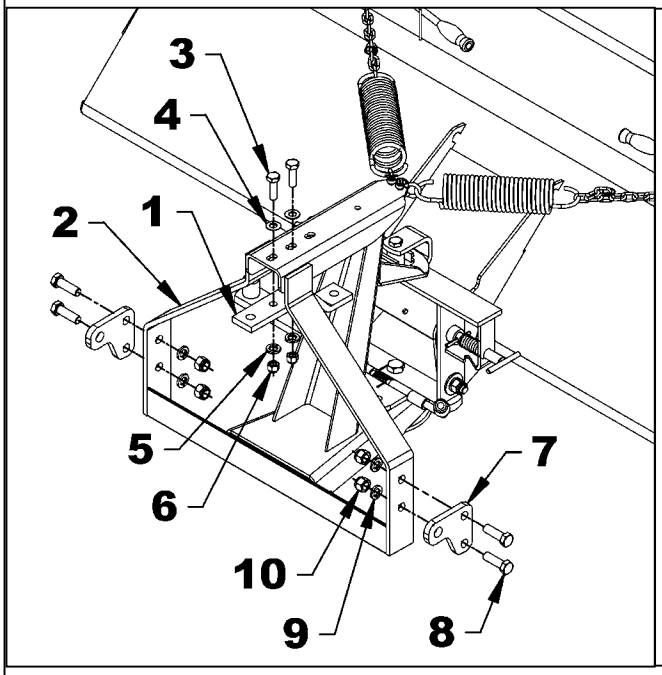

Figure 7C

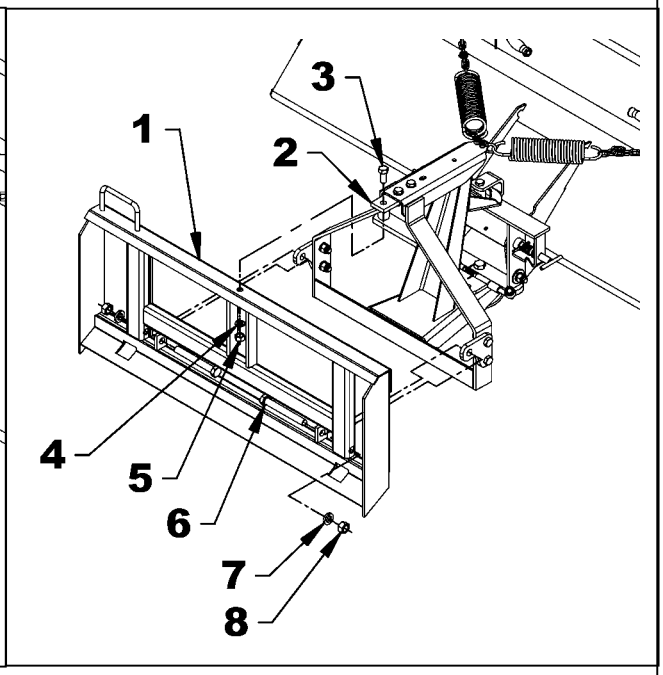

Figure 8C

Skid Steer - INSTALLATION OPTION 2 (**A** distance equal or shorter than 3")

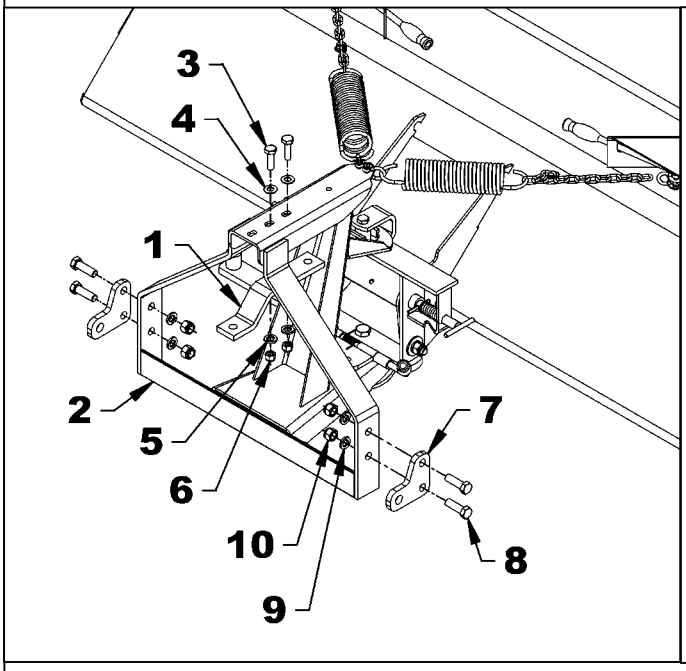

Figure 9C

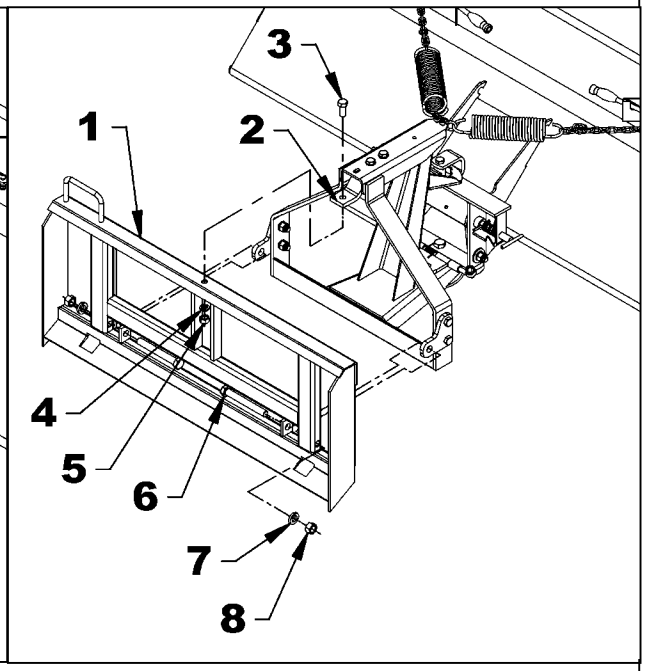

Figure 10C

Hose Installation on A- Tractor , B- Loader or C-"SKID STEER"

1. **Figure 11A, B or C:** As shown, attach the two broom hoses (item 1) on the universal hitch (item 2) with the hose clamp (item 3), 3/8"NC x 1 1/2" lg. hex. bolt (item 4), 3/8" lockwasher (item 5) and 3/8" NC hex. nut (item 6). Before tightening the hose clamp, move the broom in all possible directions (up, down, left and right, etc.) and make sure the hoses have enough loose to not get caught between the mobile parts of the broom and the tractor.
2. **Figure 12A, B or C:** With three nylon tie wraps (item 1), attach together the hoses (item 2) to the places indicated by the arrows on the figure. The two other nylon tie wraps might be used to roll and attach together the hoses excess.
3. Connect hoses to the tractor valve.

   NOTE : **the hydraulic connectors that attach the hoses to the tractor valve, front loader or skid steer are not included with this kit.**

   Furthermore, depending on the location of the valve on the tractor, front loder or skid steer, the hoses may not be long enough. If that is the case, obtain the missing hose length. Note that the fitting on the brrom hydraulic hoses are 1/2" NPT rigid male.
4. **Figure 12A, B or C:** Install a red identification ring (item 3) on the connector of a hose and the other red identification ring (item 3) on the related hydraulic output of the tractor valve. Install a blue identification ring (item 4) on the connector of the second hose and the other blue identification ring (item 4) on the second hydraulic output of the tractor valve.
5. When the engine is started and the oil has run in the hydraulic circuit, turn off the engine, check the oil level and add some if needed.

NOTE: If the broom angling movement is not as desired, reverse the quick couplers on the valve and associate the colored plastic rings (fig.12A, B or C, items 3 and 4).

WARNING: To avoid serious personal injury. Escaping hydraulic/ diesel fluid under pressure can penetrate the skin causing serious injury.

- **Do not use your hands to check for leaks. Use a piece of cardboard or paper to search for leaks.**

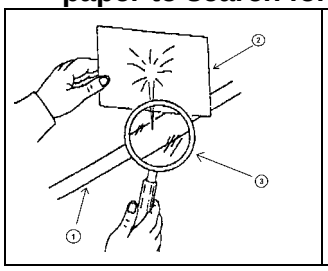

1. Hydraulic line
2. Cardboard
3. Magnifying glass

- **Stop engine and relieve pressure before connecting or disconnecting lines.**
- **Tighten all connections before starting engine or pressurizing lines.**

If any fluid is injected into the skin, obtain medical attention immediately or gangrene may result.

A - HOSES ON THE TRACTOR

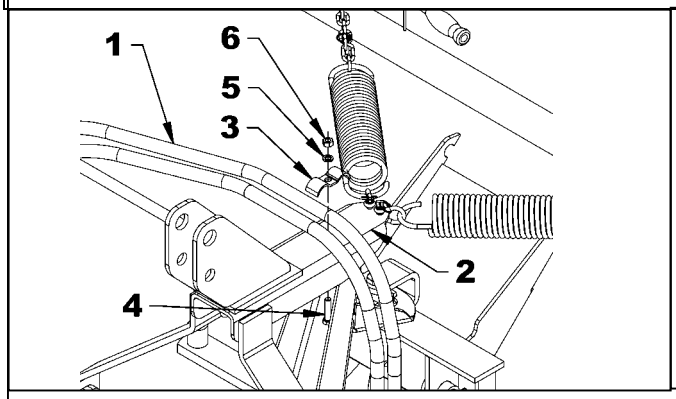

Figure 11A

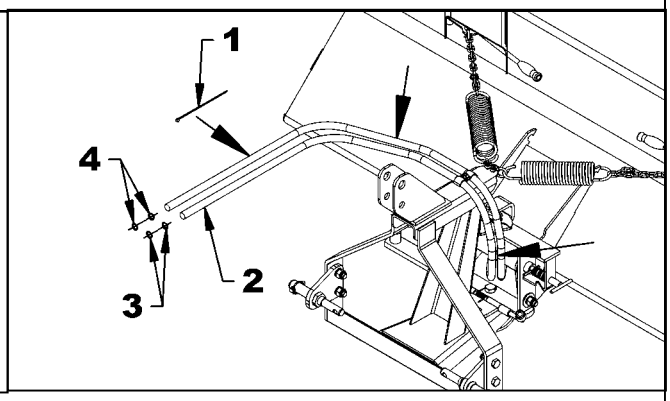

Figure 12A

B - HOSES ON THE LOADER

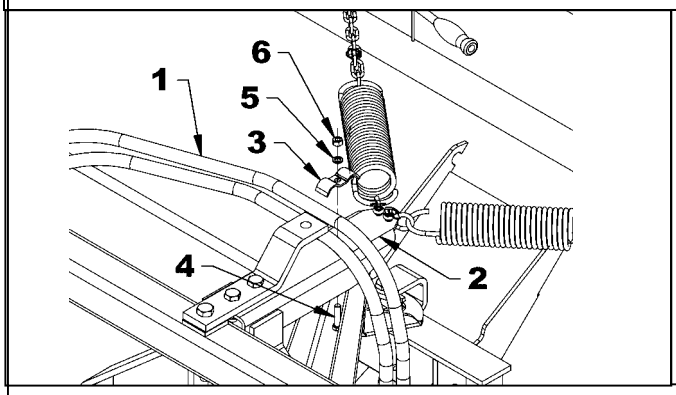

Figure 11B

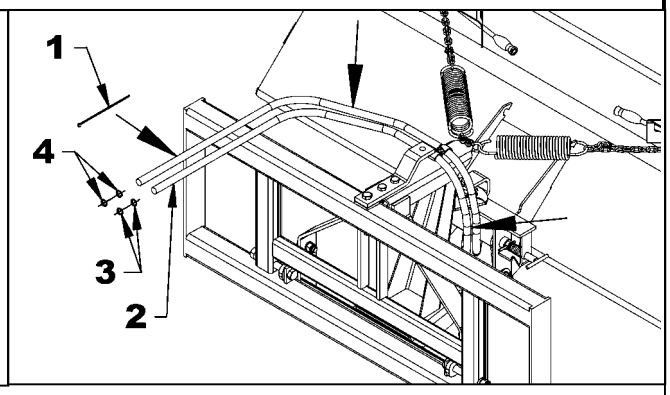

Figure 12B

C - HOSES ON THE "SKID STEER"

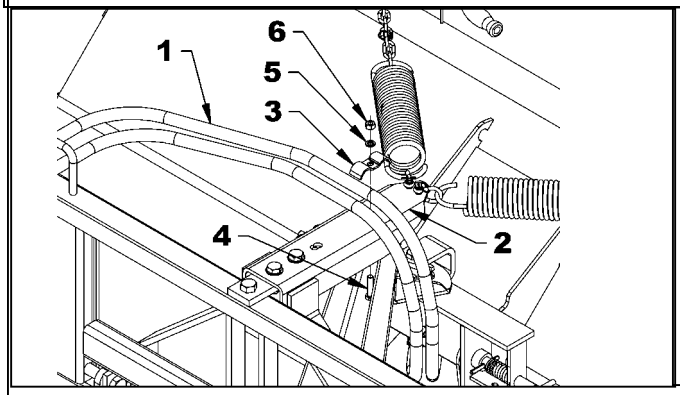

Figure 11C

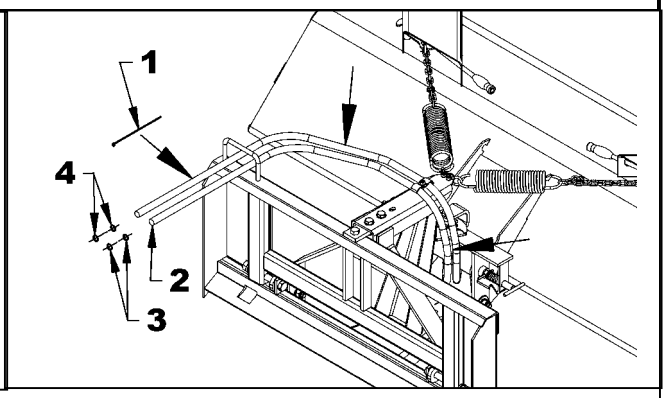

Figure 12C

Removing Rotary Broom from Tractor
(Figure 13)

Set and secure the parking stands in the position where they touch the ground. Lower the rotary broom on a flat and level surface. Put the "T" pin (item 1) in locked position then raise the front of the brrom the the pin engages. Then, reverse the installation procedure.

1. Disconnect the hoses from the hydraulic valve.
2. Install the plasctic caps and dust plugs on the hose connectors and on hydraulic valve.
3. **For Tractor:** remove the arms of 3 point hitch from the broom hitch.
4. **For the Loader:** remove the Loader hitch by reversing te installation procedure on the Loader hitch #8161 (see page 19).
5. **For the "Skid Steer":** remove the Skid Steer hitch by reversing te installation procedure on the Universal hitch #8153 (see page 21).

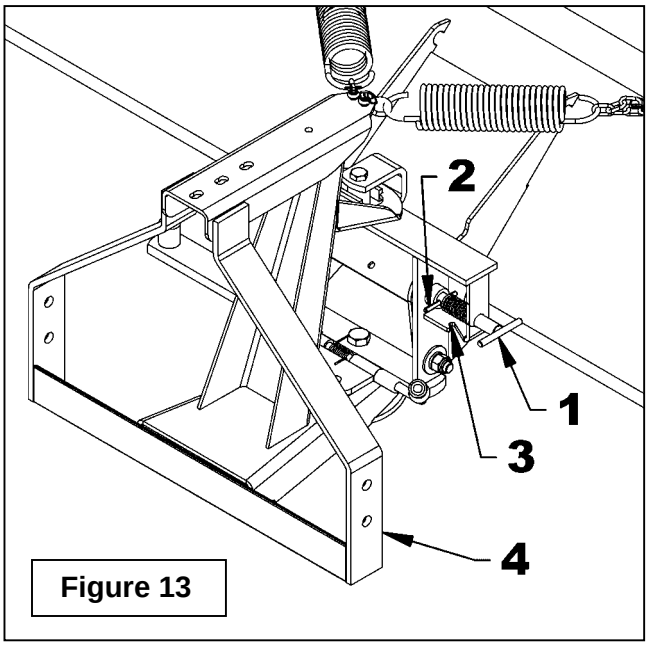

Figure 13

GENERAL PREPARATION

1. Check that hoses are connected correctly.
2. Make sure the "T" pin (fig. 13, item 1) is in the unlocked position.
3. Make sure that the broom operates freely.
4. Secure the parking stands in the position where they do not touch the ground (up).

WARNING: To avoid serious injuries:

- **Do not allow bystanders near working area.**
- **Do not allow anyone to ride on rotary broom.**
- **Before cleaning, adjusting or repairing the rotary broom: bring the tractor to a complete stop, wait for all movement to stop, apply parking brake, lower the implement to the ground, shut off the engine and remove the ignition key.**
- **Never put any part of your body under the rotary broom while making adjustments.**

ATTENTION

Always operate the broom from the operator's seat only. Never allow anyone to ride on the machine.

ATTENTION

Operate the broom at a speed that matches the working conditions. Be extremely careful when working on banks or uneven terrain.

ATTENTION

Always wear protective eyewear when operating the broom.

OPERATION

Rotary Broom Controls

1. Use the hydraulic remote to start and stop the brush. Start the engine and put the throttle lever at low engine speed. Engage the hydraulic control lever and maintain engaged. Make sure the broom is turning in the right direction. If not, switch the quick couplers. To stop the rotation, disengage the hydraulic control lever.
2. Never engage or disengage the rotary broom at high engine speed or the hydraulic motor could get damaged.
3. Raise and lower the broom using the hydraulic lift lever located on the tractor. Pulling the lever backward raises the broom, pushing the lever forward lowers the broom.
4. Control brush speed with the RPM. Under most conditions, if the brush speed is too fast, it results in debris coming over the hood onto the operator.

Manual Angling Adjustment

1. This rotary broom is able to angle at five positions: straight, two left and two right (12.5° and 25°).
2. To adjust, raise the rotary broom off the ground, carefully lift the handle lever (fig.1, item 4), select the desired angle position then release the lever. Make sure the rotary broom is locked in position at the desired angle.

Pivot Lock "T" Pin

The locked position of the "T" pin (fig. 13, item 1) is used to prevent the female hitch from being pulled up by the action of the spring thus facilitating installation and removal of rotary broom. The locked position is also used during travel and brush replacement.

Do not operate the broom with the "T" pin in the locked position or damage to the broom could occur.

Ground Pressure Adjustment ***(Figures 14-15)***

This adjustment must be made when the broom is installed on the tractor, loarde or "Skid Steer".

IMPORTANT: The "T" pin (fig. B, item 1) MUST BE in the unlocked position.

1. For the most efficient sweeping, the brush must have good ground contact without too much pressure being placed on the bristles in order to prevent them from bending which would result in premature wear of the brush.
2. Check to make sure the tractor's tire pressure is right.
3. Find a hard and dirty surface. Lower the brush to the ground, engage the broom and let the brush turn for 5 to 10 seconds while remaining in place. Disengage the broom with raising it and wait for the brush to stop turning.
4. Raise the broom and back away. Once immobilized, turn the engine off.
5. **Figure 14 :** Measure the path cleaned. If the brush is adjusted properly, the path is between 3 1/4" and 3 3/4" wide (83 and 95mm) and both sides of the path are parallel.
6. **Figure 15 :** To adjust the ground pressure, simply raise each engagement lever (item 1), move it forward or backward in the notches (item 2) of each tension adjustment box. To reduce ground pressure, move the engagement lever toward the front of the broom. To increase, move towards the rear of the broom. Make sure the weight is evenly distributed on both sides. An asymmetric adjustment may be necessary to counterbalance the weight of the broom and the ground pressure.

NOTE: Attach the spring in another chain link if the engagement levers (item 1) cannot be set to obtain a proper adjustment. Shorten the chain if the path cleaned is wider than 3 3/4" and lengthen the chain if it's narrower than 3 1/4". See the section ***"Installation of the Tension Springs"*** to make this adjustment.

NOTE: Further adjustment will be necessary to compensate for brush wear.

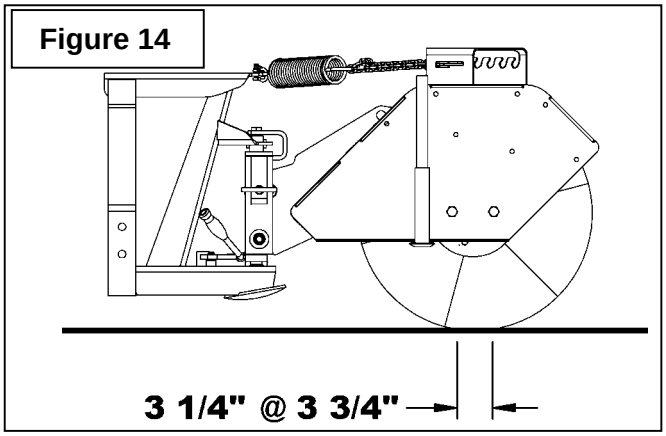

Figure 14

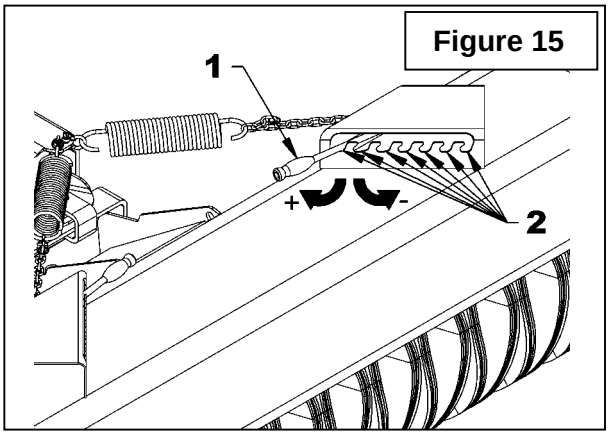

Figure 15

IMPORTANT: Figure 14a :

When the broom is in operation, make sure the distance between the universal hitch and the ground is between 3 1/4" and 3 1/2". In all time, the distance must never be under 3 1/4".

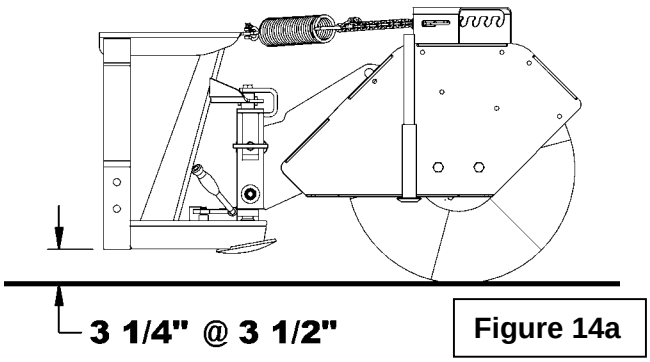

Figure 14a

General Sweeping

1. Minimize dust by reducing rotation speed of the brush and by sweeping on days with high moisture.
2. For light material, angle broom 12.5° right or left rather than fully angled to obtain a wider sweeping path.
3. For heavier material, reduce ground speed and angle the brush fully to the left or right to expel the accumulated debris from the sweeping path as quickly as possible thus preventing build up.
4. Prevent damage to the broom by removing large foreign objects.

Lawn Dethatching & Leaf Raking

IMPORTANT: Optional lawn dethatching wheels must be installed to perform these tasks in order to avoid excessive ground contact.

1. Bristles should barely touch the ground for lawn dethatching and leaf raking operations.
2. To adjust the height of the wheel (1/4" at a time, from 4 1/4" minimum to 9 1/2" maximum) slide the inner tube upward or downward, as needed, and insert the round wire lock pin in the open hole.
3. We recommend adjusting the wheel height to 1" lower than the brush height to make a first try on the grass. Then raise or lower the wheels as required.
4. Slower brush speed and ground speed are more adequate for lawn dethatching. This will avoid bouncing which could damage the lawn due to excessive ground contact.
5. Minimize dust by reducing brush speed and by sweeping when moisture is high (but not wet) whenever possible.

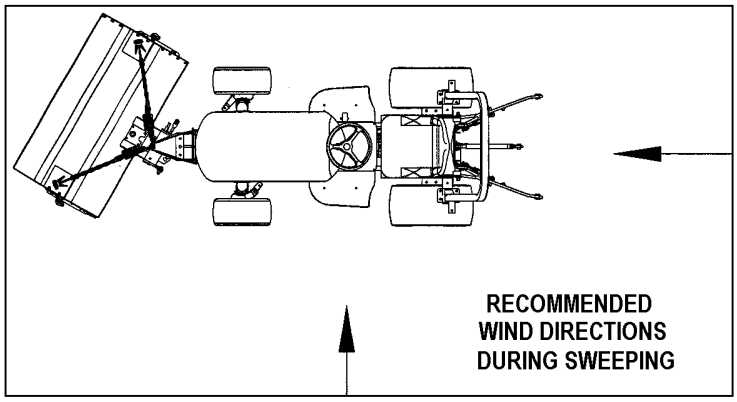

Snow Removal

WARNING:

To avoid serious injuries: Foreign objects in snow may be thrown farther than the snow. Use the slowest brush speed that will perform the job. Stay aware of broom discharge direction.

WARNING:

To avoid serious injuries: Snow or ice build-up on the sweeper hood can cause a loss of tractor steering control. Regularly remove any snow or ice from the sweeper hood to prevent the excess weight from affecting steering.

1. This broom's optimum performance is achieved when snow depth is 3" or less.
2. To avoid the snow from being blown back on the tractor and operator, sweep with the wind blowing in the direction of broom discharge.
3. Vary the brush speed and broom angle so the brush throws material on each side to prevent excessive accumulations.
4. Brush speed must be at its maximum to obtain a better performance in wet, heavy snow or slush

TROUBLESHOOTING

Debris Accumulation in Front

- Reduce the travel speed.
- Increase the engine rpm.
- Make more than one pass.
- Raise the brush to decrease the contact area.
- Increase the broom angle.

Uneven Wear of the Brush

- Make sure there is no debris wrapped around the brush.
- Check the ground pressure adjustment (see page 26).
- Remove the accumulated debris under the hood.

MAINTENANCE

ALWAYS USE GENUINE PARTS WHEN REPLACEMENT PARTS ARE REQUIRED.

1. Avoid exposing broom bristles to direct sunlight for long periods to avoid damage.
2. Because of the dust raised during sweeping, the tractor air cleaner should be checked daily and replaced when necessary.

Hardware

Check and tighten all hardware, including factory-installed hardware, before operating the rotary broom and every 40 hours of operation.

Brush Replacement
(Figure 16)

When the wafers reach a diameter of 12", it is necessary to replace them in order to maximize the performance of your broom.

1. Place the tractor/equipment on level ground, place transmission in neutral, wait for all movement to stop and apply parking brake.
2. With the broom still attached to the tractor, position the broom on the ground and place the engagement levers (fig. 15, item 1) at the lowest ground pressure.
3. Remove the three 1/2" x 2 1/4" hex. bolts (item 8), the 1/2" lockwashers (item 6) and the 1/2" nuts (item 7) that hold the hydraulic motor.
4. Remove the 3/8" X 1 1/2" bolt (item 11) and the 3/8" nylon insert locknut (item 12) to remove the inner guard (item 13).
5. Remove the 1/2" x 1 1/4" hex. bolts (item 1), the 1/2" lockwashers (item 4) and the 1/2" nuts (item 5) that hold the flange bearing on the side opposite the hydraulic motor.
6. Put the "T" pin (fig. 13, item 1) in the lock position and raise the front of the broom so the pin locks. Remove the brush assembly from the broom housing and place vertically with the hydraulic motor resting on the ground.
7. Remove the 5/16" x 2 1/2" hex. bolts (item 2) and 5/16" lockwashers (item 3) from the retaining plate (item 14) of the brush support making sure not to damage the hydraulic hoses.

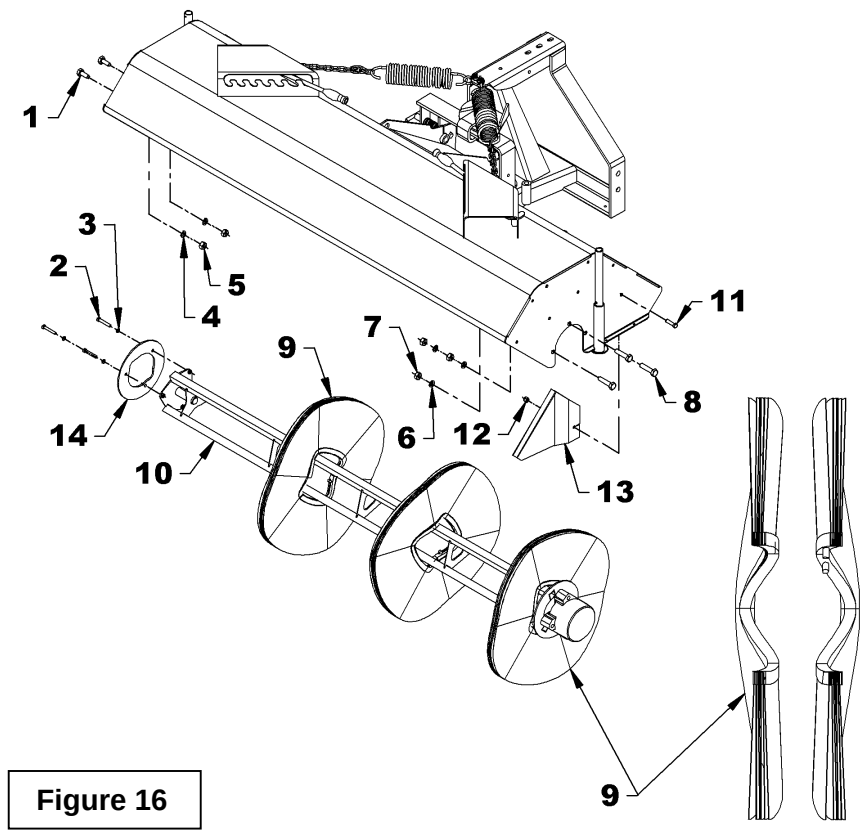

Figure 16

8. Remove the wafers (item 9) by sliding them off the support, one by one.
9. Insert the first wafer on the brush support (item 10) by aligning the guides (item 15) on each side of one of the brush support tubes (item 10). Continue the same procedure with the remaining wafers by turning each wafer 120° so the guides are distributed evenly on each brush support tube and making sure to always place the brushes back to back as shown on figure 16.
10. Reinstall the retaining plate (item 14) at the end of the brush support and secure with the three 5/16" x 2 1/2" hex. bolts (item 2) and the 5/16" lockwashers (item 3) making sure to screw each bolt 1/2" at a time to prevent the retaining plate from warping.
11. Place the assembled brush under the housing. Unlock the "T" pin to lower the housing. Reverse the steps to reinstall the bolts, lockwashers and nuts.
12. Make sure that the hydraulic hoses are well protected by the inner guard (item 13) to prevent damage during operation.

Assembling a 50/50 polypropylene/steel brush set

If you install a 50/50 polypropylene/steel brush set,

- begin with two polypropylene wafers,
- followed by two steel wafers
- followed by one polypropylene wafer and one steel wafer,
- to finish with two or three polypropylene wafers,

depending of the needed quantity to attach the retaining plate (item 14) correctly.

STORAGE

Before storing the rotary broom, certain precautions should be taken to protect it from deterioration.

1. Clean the rotary broom thoroughly.
2. Make all the necessary repairs.
3. Repaint all parts from which paint has worn or peeled.
4. Lubricate the rotary broom as instructed under *Lubrication*.
5. Replace all decals that are damaged, lost, or otherwise become illegible. If a part to be replaced has a sign on it, obtain a new decal from your dealer and install it in the same place as on the removed part.
6. When the rotary broom is dry, oil all moving parts. Apply oil liberally to all surfaces to protect against rust.

IMPORTANT: Do not allow oil or grease on broom bristles.

7. Store broom on parking stands so that the bristles do not touch the ground.
8. Store in a dry place.

IMPORTANT: If broom bristles are exposed to direct sunlight, protect bristles with a tarp.

LUBRICATION

Use a grease gun, grease and lubricate as follows:

DESCRIPTION	TIME INTERVAL	LUBRICATION REQUIRED
All pivot points	40 hours of operation	Use a good quality multipurpose lubricant
Bearing	100 hours of operation	Grease the bearing
Wheel pivot	40 hours of operation	Use a good quality multipurpose lubricant
Wheel	40 hours of operation	Use a good quality multipurpose lubricant

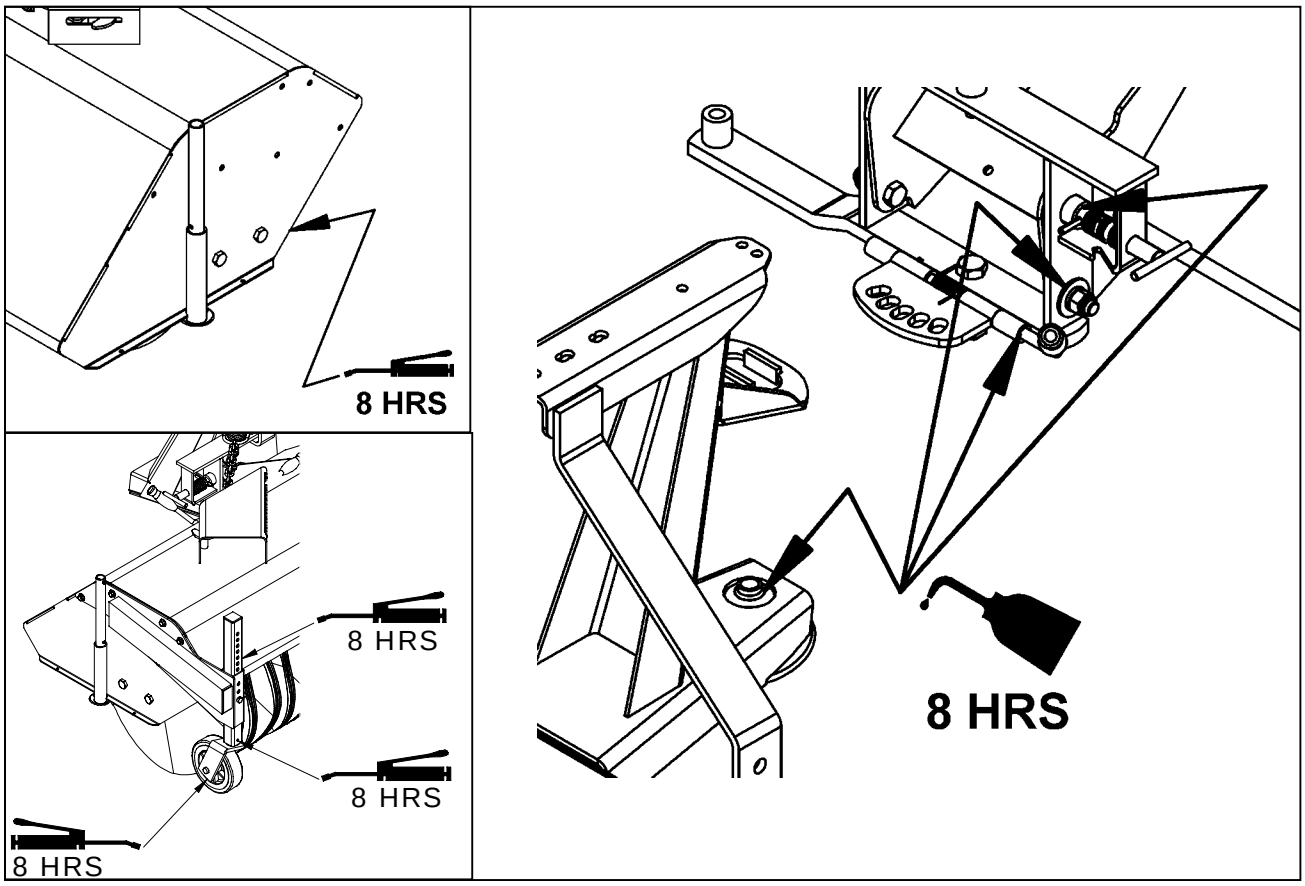

INTRODUCTION

All parts are illustrated in "exploded views" which show the individual parts in their normal relationship to each other. Reference numbers are used in the illustrations. These numbers correspond to those in the "Reference Number" (REF) column, and are followed by the description and quantity required.

O/L - "Obtain Locally" in the part number column indicates common hardware that is available at your local hardware supply.

All reference to right and left, forward or rearward, are from the operator seat, looking at the machine while operating.

Orders must give the complete description, correct part number, the total amount required, the serial number, the method of shipment and the shipping address.

The manufacturer reserves the rights to change, modify, or eliminate from time to time, for technical or other reasons, certain or all data, specifications, or the product or products themselves, without any liability or obligation.

The parts listed here are available through your local dealer.

DECALS

Replace Immediately if Damaged

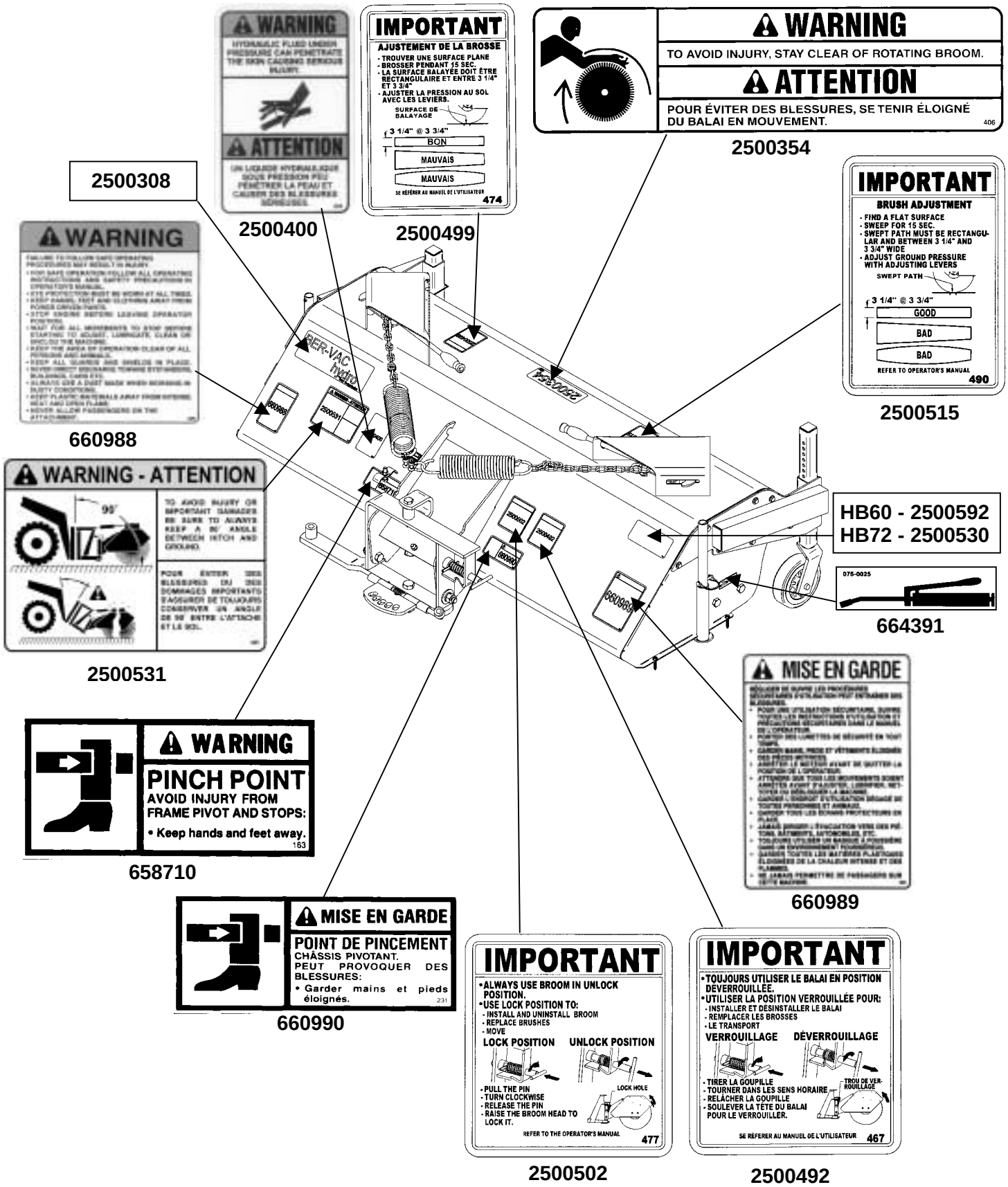

ROTARY BROOM ASSEMBLY

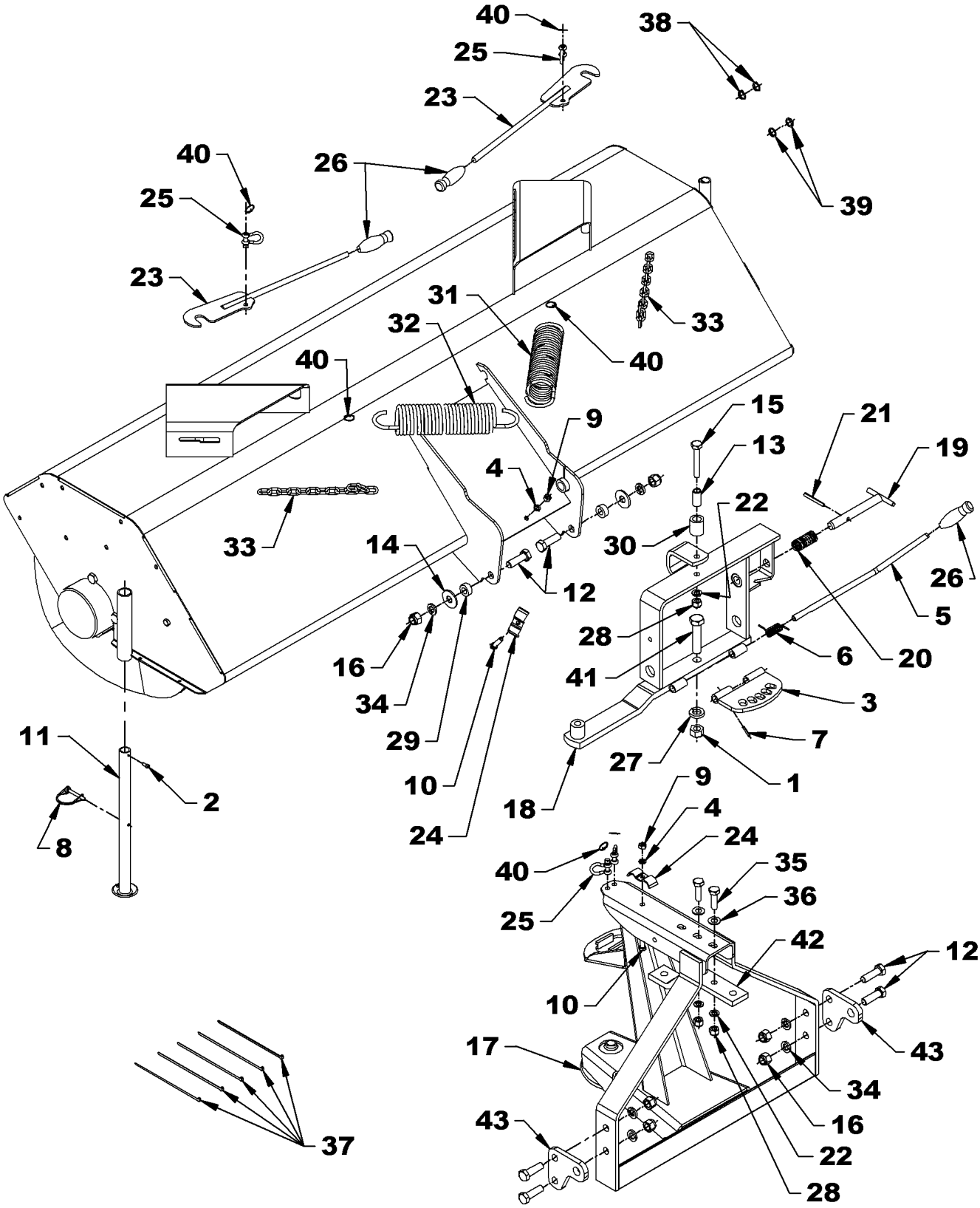

ROTARY BROOM ASSEMBLY

REF.	DESCRIPTION	QTY	PART #
1	Stover mut 3/4" NC. PTD	1	1100008
2	Sheet metal screw #10 x 3/4" square pan head #2, PTD	2	O/L
3	Adjustment plate	1	667209
4	Lockwasher 3/8" PTD	2	O/L
5	Handle	1	659651
6	Torsion spring 9/16" x 1 1/2"	1	657989
7	Spring pin 3/16" X 1"	1	1600006
8	Round wire lock pin 1/4"	2	1900006
9	Nut hex 3/8" NC PTD	2	O/L
10	Bolt hex. 3/8" NC x 1 1/2" lg. gr.5 PTD	2	O/L
11	Parking stand	2	667212
12	Bolt hex. 5/8" NC x 2" lg. gr.5 PTD	6	O/L
13	Spacer	1	667174
14	Flat washer 11/16" hole , PTD	2	O/L
15	Bolt hex. 1/2" NC x 3 1/4" lg. gr.5 PTD	1	O/L
16	Nylon insert locknut 5/8" NC, PTD	6	O/L
17	Universal hitch	1	667309
18	Broom pivot	1	667154
19	Pin "T"	1	667156
20	Compression spring	1	2200009
21	Spring pin 1/4"X 2 1/2" LG.	1	1600021
22	Lockwasher 1/2", PTD	3	O/L
23	Engagement lever	2	667153
24	Hose clamp	2	660440
25	Clevis ø1/4"	4	A-10368
26	Plastic handle	3	656797
27	Lockwasher 3/4", PTD	1	O/L
28	Nylon insert locknut 1/2" NC, PTD	3	O/L
29	Pivot bushing	2	667172
30	Bushing 1 7/16" lg x 1.25 OD, PTD	1	667173
31	Tension spring ø0.281"	1	2200008
32	Tension spring ø0.312"	1	2200007
33	Chain	2	2300016
34	Lockwasher 5/8" PTD	6	O/L
35	Bolt hex. 1/2" NC x1 3/4" lg. gr.5 PTD	2	O/L
36	Flat washer 9/16" hole, PTD	2	O/L
37	Nylon tie wrap 8" x 4.8mm lrg. Black	5	2100003
38	Identification ring - rouge	2	658204
39	Identification ring - blue	2	658205
40	Circle cotter ø1" x 1/16"	6	1900009
41	Bolt hex. 3/4" NC x 3 1/4" lg. gr.5, PTD	1	O/L
42	Common upper support	1	667326
43	Common lower support	1	667327

ROTARY BROOM HOUSING

REF.	DESCRIPTION	QTY	PART #
1	Inner guard	1	667161
2	Hydraulic motor	1	3900222
3	Bolt hex. 1/2" NC x 2 1/4" lg. gr.5 PTD	3	O/L
4	Castle nut 1"-20 NEF thin	1	1100026
5	Cotter pin 5/32" x 2", PTD	1	O/L
6	Bolt 3/8" NC x 1 1/2" lg. gr.5, PTD	1	O/L
7	Bearing 1" dia & setscrew	1	4300025
8	Housing - HB60	1	667950
	Housing - HB72	1	667157
9	Bolt hex. 1/2" NC x 1 1/4" lg. PTD	2	O/L
10	Nut hex. 1/2", NC, PTD	5	O/L
11	Lockwasher 1/2", PTD	5	O/L
12	Nylon insert locknut 3/8" NC, PTD	1	O/L
13	Hose rubber 1/2" x 132" lg 3000PSI, 1/2 NPT SM x 3/4 JIC SWF	2	3700079
14	Hydraulic female cap 1/2" NPT	2	2600108
15	Adaptater 3/4 JIC SM x 7/8 ORB SM	2	665242

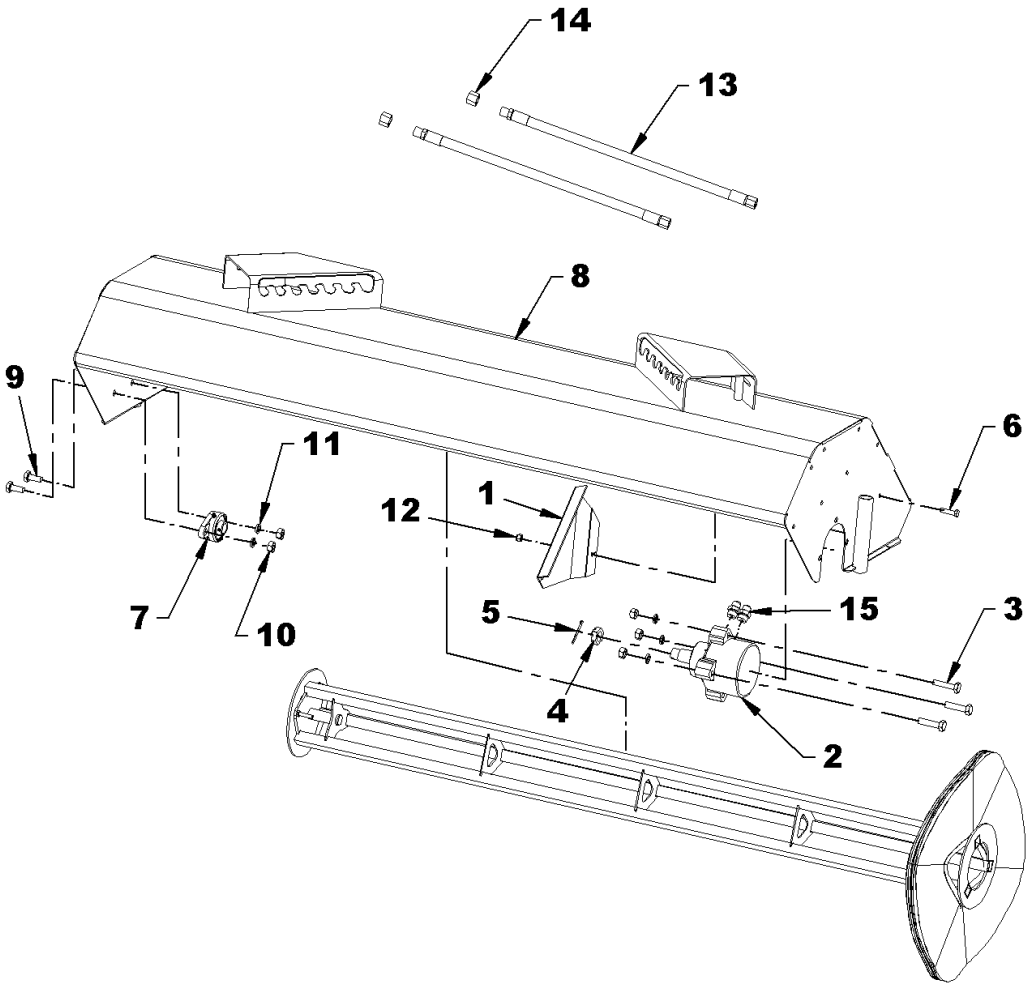

BRUSH ASSEMBLY

REF.	DESCRIPTION	QTY	PART #
1	Bolt hex 5/16" NC.x 2 1/2" lg. Gr.5 PTD.	3	O/L
2	Wafer brush - HB60		663492
	Brush set - HB60 – 100% polypropylene 22"		BR0006
	Brush set - HB60 - 50% polypropylene/50% steel 22"		BR0007
	Wafer brush - HB72	36	663492
	Brush set HB72 – 100% polypropylene 22"		BR0004
	Brush set HB72 - 50% polypropylene/50% steel 22"		BR0005
3	Lockwasher 5/16" PTD.	3	O/L
4	Brush support - HB60	1	667949
	Brush support - HB72	1	667155
5	Retaining plate	1	667175

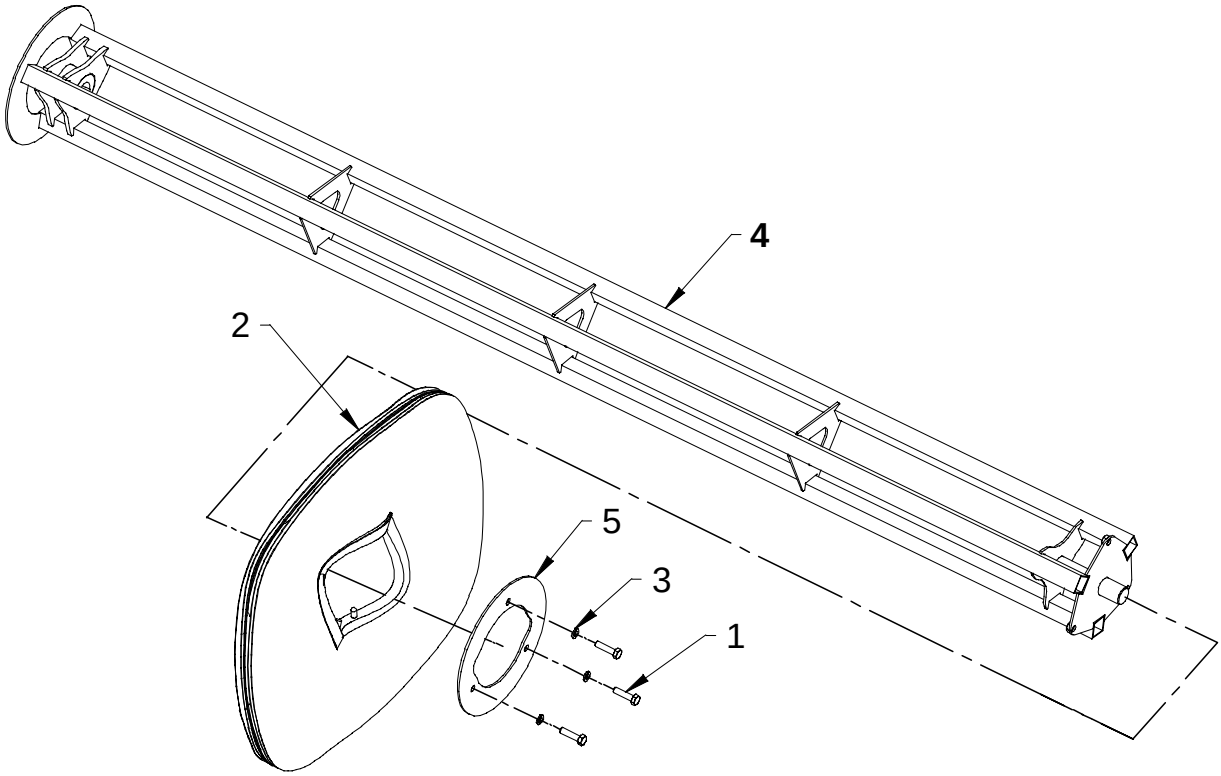

HYDRAULIC MOTOR – 3900222

REF.	DESCRIPTION	QTY	PART #
1	Seal kit	1	3900223
2	Front housing bearing	1	3900224
3	Housing	1	3900225
4	Front thrust washer	1	3900226
5	Front thrust bearing	1	3900227
6	Rear housing bearing	1	3900228
7	Rear thrust bearing	1	3900229
8	Drive link	1	3900230
9	Forward manifold	1	3900231
10	Standard rotor	1	3900232
11	Balance plate	1	3900233
12	Steel balls (3)	1	3900234
13	End cover	1	3900235
14	Bolt set	1	3900236
15	Shaft 1 1/4"	1	3900237
16	Key	1	3900238
17	Castle nut 1"-20 UNEF	1	1100026

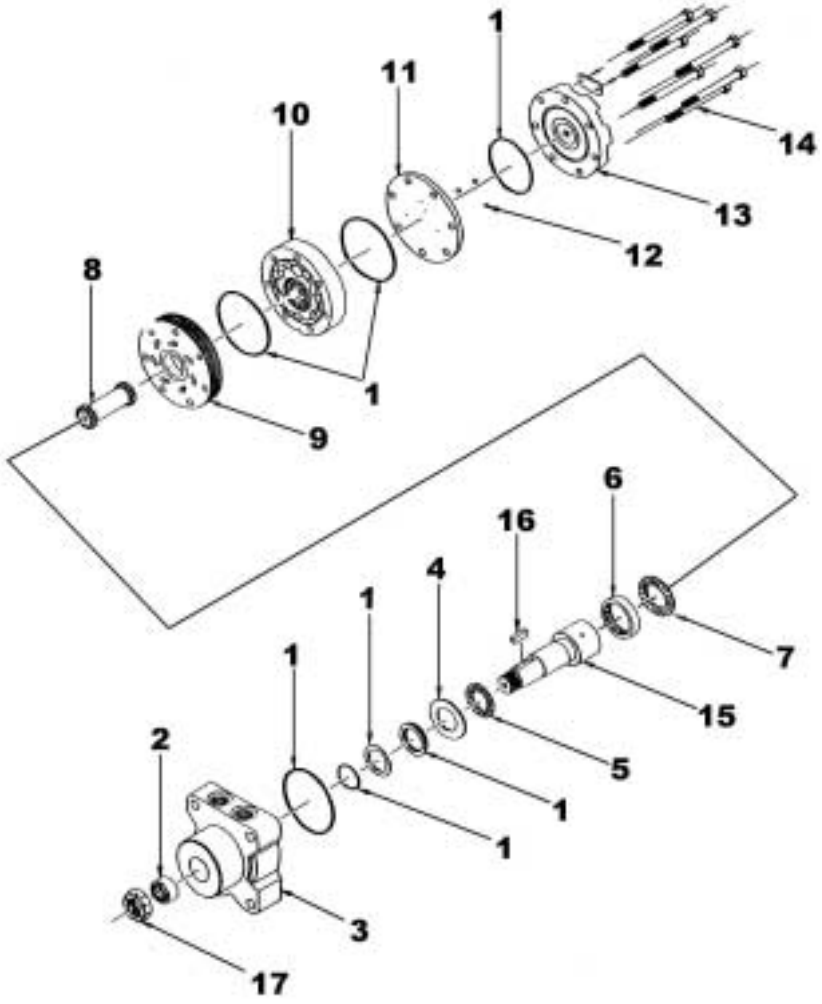

3 POINT HITCH CAT.1 & 2

REF.	DESCRIPTION	QTY	PART #
1	Upper support	1	667324
2	Lower support	2	667325
3	Pin cat. 1 & 2 PTD (w/ Lockwasher & nut)	2	654204
4	Linchpin 7/16" PTD	2	1900003

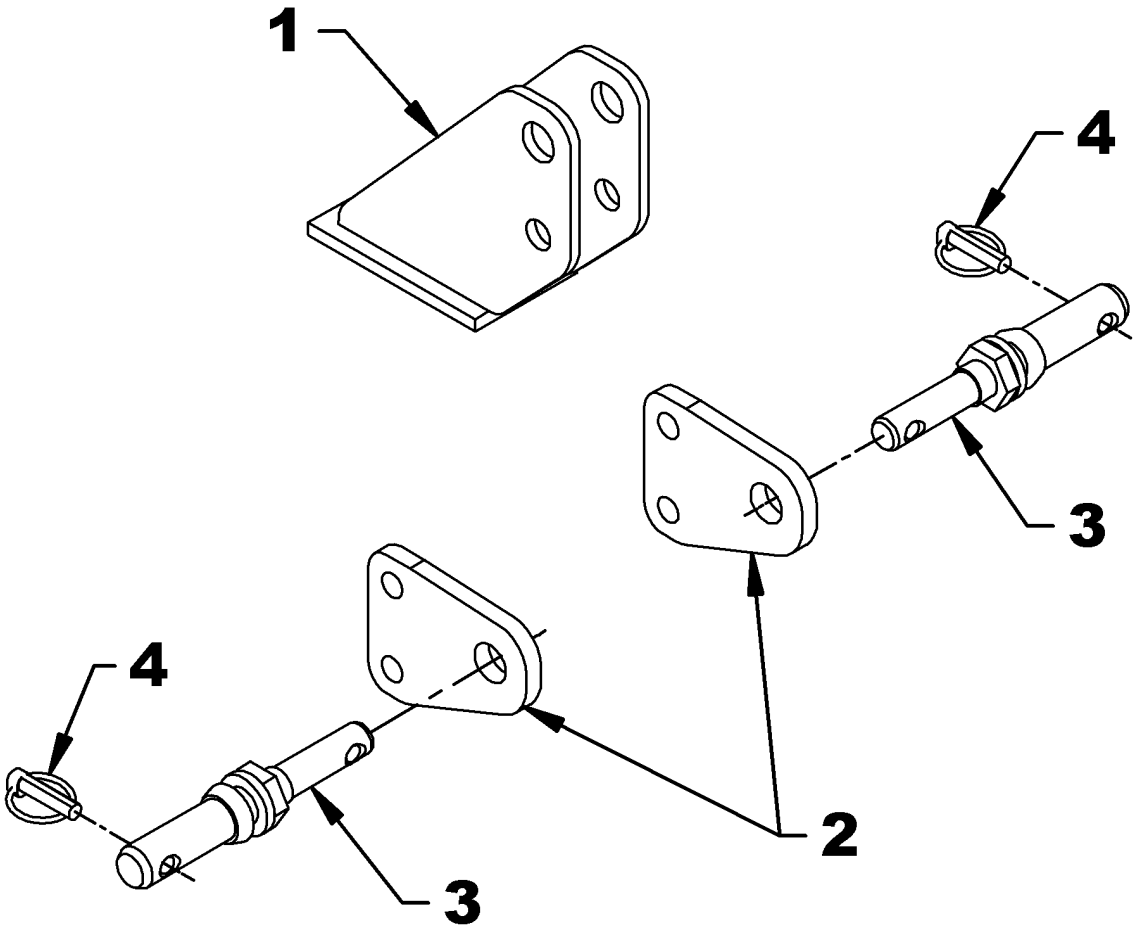

SIDE CASTER WHEELS

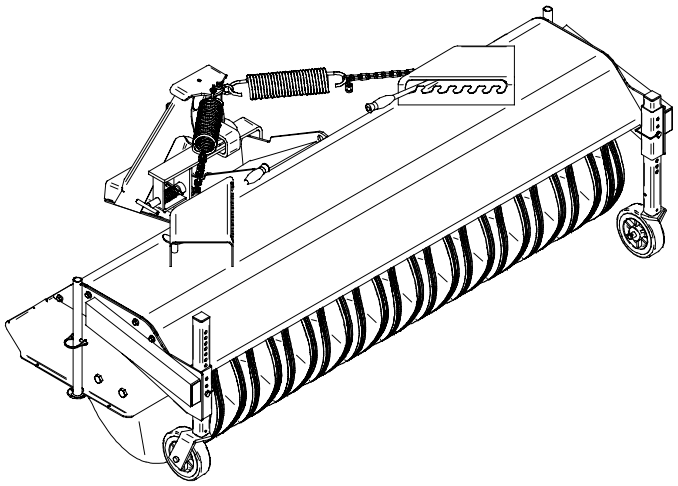

HYDRAULIC ANGLING

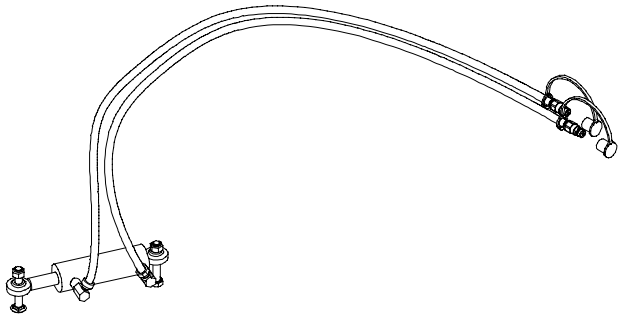

WARRANTY

RAD TECHNOLOGIES INC.

Division Thetford Mines

RAD TECHNOLOGIES INC. warrants to the original buyer that the equipment is free from defects in material and workmanship. RAD TECHNOLOGIES INC.'s obligation, under this warranty, will be limited to the repair or replacement of any non-wear part or component, which RAD TECHNOLOGIES INC. finds to be defective within **one year** from the date of original purchase (unless otherwise-specified). The applicable warranty period for commercial or rental use shall be ninety (90) days from the date of purchase

In no event shall RAD TECHNOLOGIES INC. be liable for consequential, special, direct or indirect damages incurred by the buyer/user.

All components not manufactured by RAD TECHNOLOGIES INC. (such as motors, actuators, hydraulic components, tires, ...etc.) are covered by the original manufacturer's warranty in conjunction with RAD TECHNOLOGIES INC.

RAD's obligation under this warranty shall be limited to repairing or replacing, free of charge to the original purchaser, any part that, in RAD's judgment, shall show evidence of such defect, provided the **distributor** returns the part prepaid within thirty (30) days from date of failure.

This warranty shall not be interpreted to render RAD TECHNOLOGIES INC. liable for injuries or damages of any kind or nature to person or property. This warranty does not extend to losses because of delays, or to any expenses or losses incurred for labor, substitute machinery, rental or for any other reason.

Except as set forth above, RAD TECHNOLOGIES INC. shall have no obligation or liability of any kind on account of any of its equipment and shall not be liable for special or consequential damages. RAD TECHNOLOGIES INC. makes no other warranty, expressed or implied, and specifically, RAD TECHNOLOGIES INC. disclaims any implied warranty or merchantability or fitness for a particular purpose**. Some states or provinces do not permit limitations or exclusions of implied warranties or incidental or consequential damages, so the limitations or exclusions in this warranty may not apply.**

This warranty is subject to any existing conditions of supply, which may directly affect our ability to obtain materials or manufacture replacement parts. RAD TECHNOLOGIES INC. reserves the right to make improvements in design or changes in specifications at any time, without incurring any obligation to owners of units previously sold.

No one is authorized to alter, modify or enlarge this warranty nor the exclusions, limitations and reservations.

2835 Chemin de l'Aéroport, Thetford Mines (Québec) G6G 5R7

Tél.: (418) 338-4499 Fax: (418) 388-6090
Internet : www.radinter.com Courriel : radtech@radinter.com

TORQUE SPECIFICATION TABLE

GENERAL SPECIFICATION TABLE Use the following torques when special torques are not given Note: These values apply to fasteners as received from supplier, when dry. These values do not apply if lubricants are used.		
BOLT SIZES (SAE)	**TORQUE**	
INCHES	**Pounds-Foot**	**Newtons-Meter**
1/4	5	7
5/16	10	14
3/8	20	27
7/16	25	41
1/2	88	119
9/16	121	164
5/8	165	224
3/4	297	403
7/8	440	597
1	638	865
1 1/8	840	1139
1 1/4	1180	1600
1 3/8	1570	2129
1 1/2	2070	2807

BOLT SIZES (METRIC)	**TORQUE**	
MILLIMETERS	**Pounds-Foot**	**Newtons-Meter**
M6	10	13
M8	22	30
M10	40	54
M12	59	80
M14	93	126
M16	130	176
M18	168	228
M20	205	278

Manufactured by:

RAD TECHNOLOGIES INC.
Division Thetford Mines
2835, Chemin de l'Aéroport
Thetford Mines, Québec, Canada, G6G 5R7
Tel.: (418) 338-4499 - Fax.: (418) 338-6090
E-mail : radtech@radinter.com
Internet : www.radinter.com

Printed in Canada